CFG35UF履带式液压挖掘机(PCE0000003)

CFG35UFCrawler hydraulic excavator

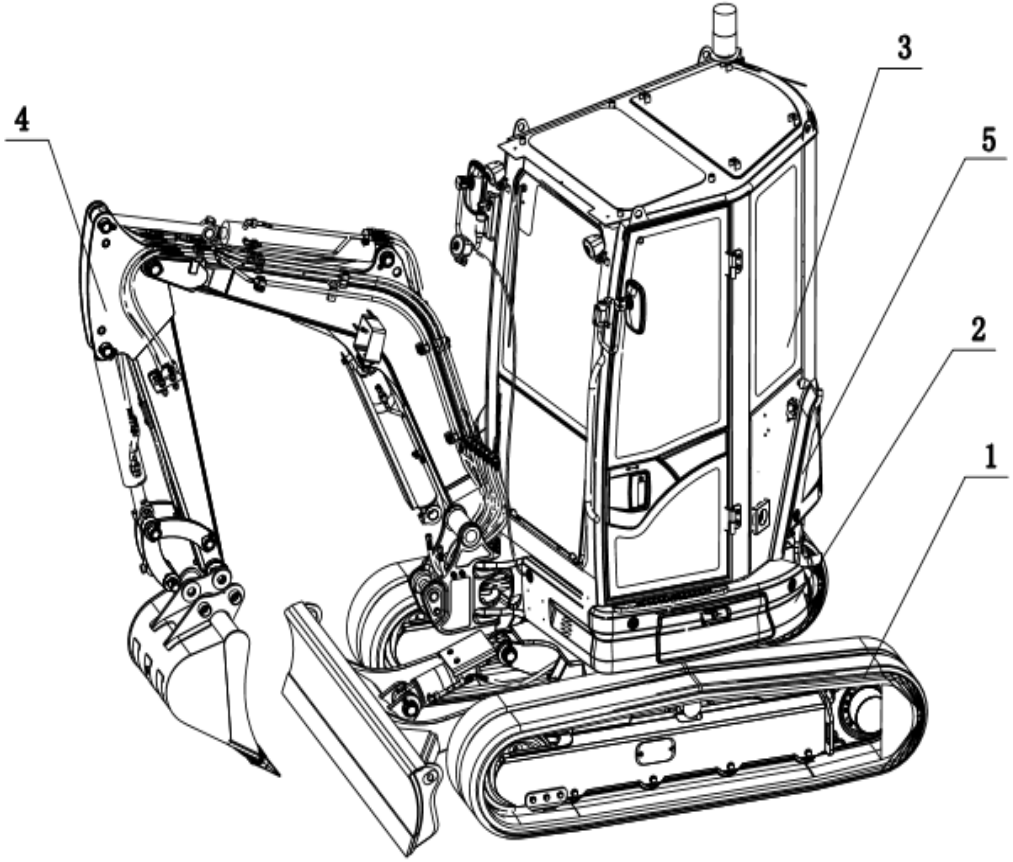

序号 POS	编码 CODE	DESCRIPTION	名称	数量 QTY	备注 remark
1	ACE0000172.2	TRAVEL DEVICE	下车总成-null	1	1-1
2	ACE0000538.3	BOARDING ASSEMBLY	上车总成-null	1	1-2
3	ACE0001671.2	SW-II CAB ASSEMBLY	SW-II型驾驶室总成-null	1	1-3
4	ACE0000705.2	WORKING ASSEMBLY	工作装置总成-null	1	1-4
5	ACE0001767.1	Sign Assembly-CFG35UF	标识总成-CFG35UF	1	1--5

工作装置总成-null(ACE0000705)

WORKING ASSEMBLY

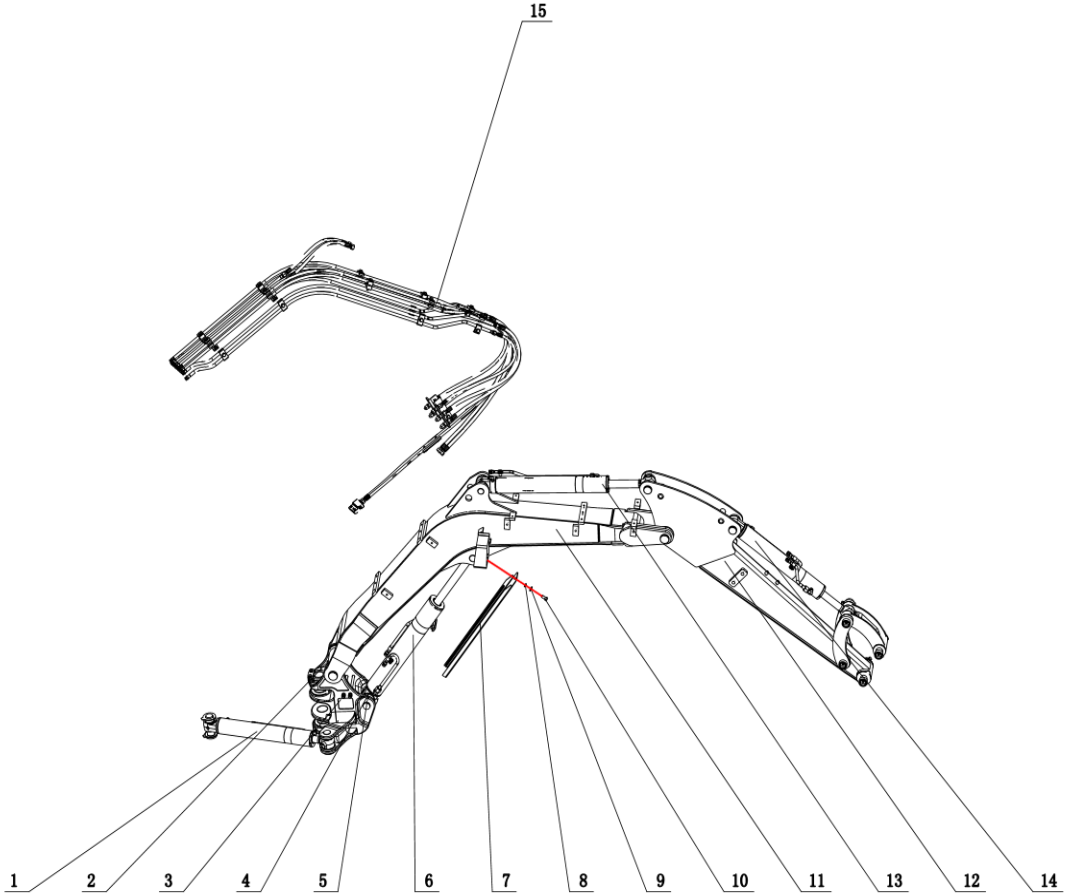

序号 POS	编码 CODE	DESCRIPTION	名称	数量 QTY	备注 remark
1	AH00000282.2	DEFLECTION CYLINDER	偏转油缸	1	1-1
2	703101010001	OIL CUP	油杯M10X1(钢制) JB/T 7940.1进口	1	1-2
3	ACE0000239.1	DEFLECTING UNIT INSTALL	偏转头安装	1	1-3
4	750911000031	RESIN GASKET	树脂调整垫Φ 75XΦ 41X1	2	1-4
5	750911000032	RESIN GASKET	树脂调整垫Φ 75XΦ 41X1.5	2	1-5
6	AH00000235.1	BOOM CYLINDER	动臂油缸	1	1-6
7	ACE0000693.1	SWING ARM OIL CYLINDER BACKLLATE	动臂油缸护板	1	1-7
8	701510012004	WASHER	垫圈12-DKL GB/T 93	1	1-8
9	701504012005	WASHER	垫圈12-DKL GBT 97.1	3	1-9
10	701104012022	BOLT	螺栓	3	1-10
11	ACE0000644.2	SWING ARM ASSEMBLY	动臂总成-null	1	1-11
12	ACE0000508.3	BUCKET ROD ASSEMBLY	斗杆总成-null	1	1-12
13	AH00000254.1	ARM CYLINDER	斗杆油缸	1	1-13
14	AH00000267.1	BUCKET CYLINDER	铲斗油缸	1	1-14
15	ACE0000624.1	WORKING DEVICE PIPELINE ASSEMBLY	工作装置液压系统	1	1-15

斗杆油缸(AH00000254)

ARM CYLINDER

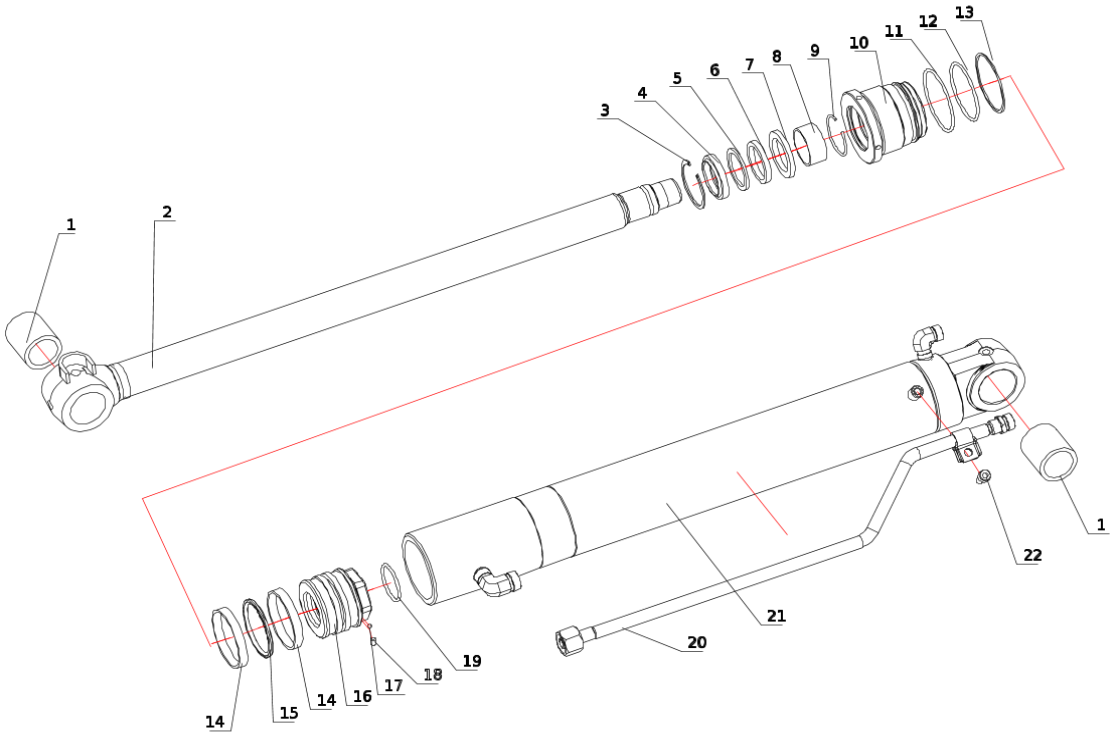

序号 POS	编码 CODE	DESCRIPTION	名称	数量 QTY	备注 remark
1	750502000695	BUSH	粉末冶金轴套35X45X49	2	1-1,1-1
2	AH00000258.1	PISTON ROD ASSEMBLY	活塞杆组件	1	1-2
3	302010007280.1	STOP COLLAR OF DUSTBAND	防尘圈挡圈40	1	1-3
4	730652000608	DUSTBAND	防尘圈DKWU 40X52X12 UT-10+SPCC	1	1-4
5	730654000818	STOP COLLAR	挡圈BKU 40X50X3 PTFE+Cu	1	1-5
6	730601000718	PISTON ROD SEAL PART	活塞杆密封URH 40X50X6 HNBR	1	1-6
7	730601000719	PISTON ROD SEAL PART	活塞杆密封BRW 40X55.5X6 UT-20+NYT	1	1-7
8	750502000029	SELF LUBRICATING BEARING	自润滑多层复合轴承MB4020	1	1-8
9	301020000032.1	CIRCLIP	弹簧挡圈44X2.5	1	1-9
10	AH00000260.1	CYLINDER HEAD	缸头M75X2-71-40-70	1	1-10
11	730603001748	O-RING	O形圈69.4X3.1-NBR-A70 JISB 2401(Y)	1	1-11
12	730654000811	STOP COLLAR	挡圈BKO 66X71X1.5 PTFE+Cu	1	1-12
13	730603001749	O-RING	O形圈64.4X3.1-NBR-A90 JISB 2401(Y)	1	1-13
14	730651000582	GUIDING RING	导向环JT 65X70X9.7 PFC-6	2	1-14,1-14
15	730602000575	PISTON SEAL	活塞密封SPS 59X70X3.95 PNR+NBR	1	1-15
16	AH00000255.1	PISTON	活塞M35X1.5-40-70-60	1	1-16
17	750551000024	STEEL BALL	钢球GCr15 D4	1	1-17
18	701307006002	SCREW	螺钉M6X8 GB/T 77	1	1-18
19	730603001768	O-RING	O形圈39.4X3.1-NBR-A90 JISB 2401(Y)	1	1-19
20	AH00000265.1	PIPELINE MODULE	油管组件	1	1-20
21	AH00000264.1	CYLINDER BARREL	缸筒组件	1	1-21
22	701302008025	SCREW	螺钉M8X20-8.8-DKL GBT 70.1	1	1-22

铲斗油缸(AH00000267)

BUCKET CYLINDER

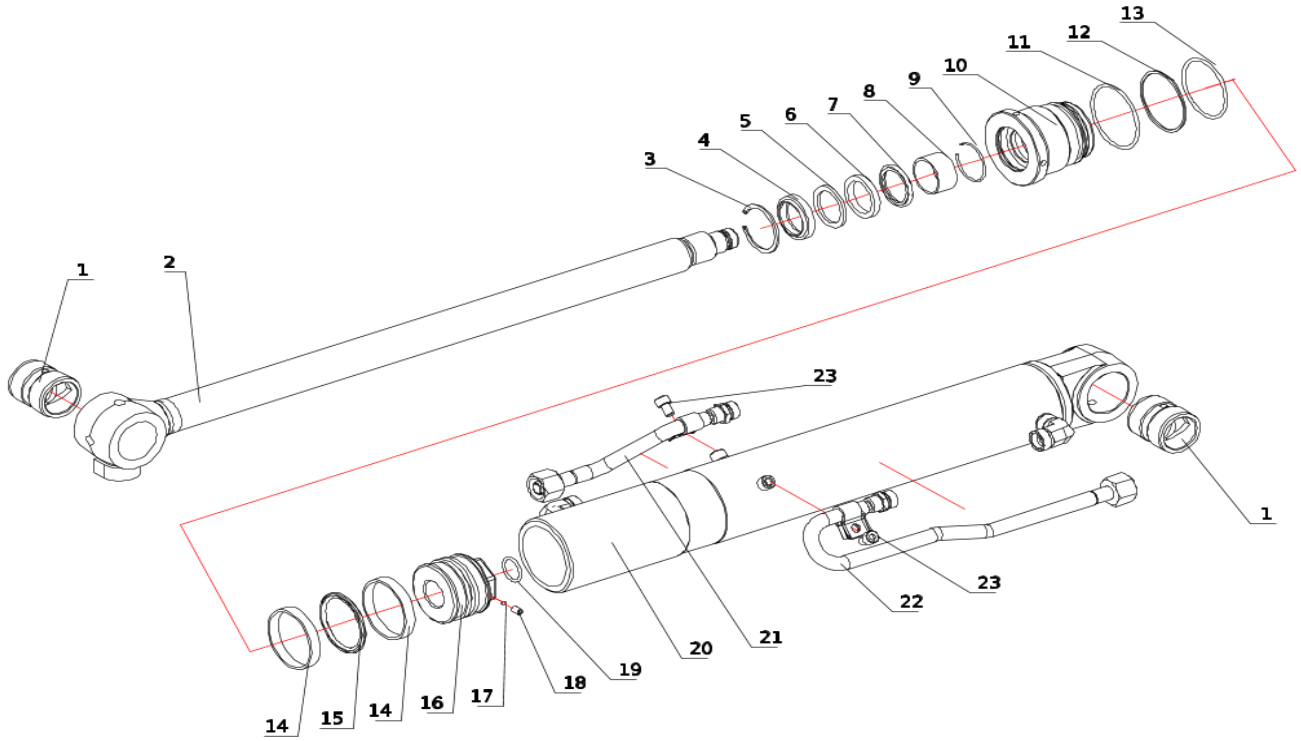

序号 POS	编码 CODE	DESCRIPTION	名称	数量 QTY	备注 remark
1	305040000066.5	BUSH	衬套35X45X49	2	1-1,1-1
2	AH00000270.1	PISTON ROD ASSEMBLY	活塞杆组件	1	1-2
3	302010007204.1	STOP COLLAR OF DUSTBAND	挡圈	1	1-3
4	730652000596	DUSTBAND	防尘圈DKWU 35X47X12 UT-10+SPCC	1	1-4
5	730654000800	STOP COLLAR	挡圈BKU 35X45X3 PTFE+Cu	1	1-5
6	730604000159	PISTON ROD SEAL PART	活塞杆密封URH 35X45X6 HNBR	1	1-6
7	730601000684	PISTON ROD SEAL PART	活塞杆密封BRK 35X45.7X3.95 PNR+N701	1	1-7
8	750502000028	SELF LUBRICATING BEARING	自润滑多层复合轴承MB3520	1	1-8
9	301020000026.2	CIRCLIP	挡圈	1	1-9
10	AH00000272.1	CYLINDER HEAD	缸头M70X2-66-35-70	1	1-10
11	730603001769	O-RING	O形圈64.4X3.1-NBR-A70 JISB 2401(Y)	1	1-11
12	730654000819	STOP COLLAR	挡圈BKO 61X66X1.5 PTFE+Cu	1	1-12
13	730603001770	O-RING	O形圈59.4X3.1-NBR-A90 JISB 2401(Y)	1	1-13
14	730651000587	GUIDING RING	导向环JT 60X65X9.7 PFC-6	2	1-14,1-14
15	730602000581	PISTON SEAL	活塞密封SPS 54X65X3.95 PNR+NBR	1	1-15
16	AH00000273.1	PISTON	活塞M30X2-22-65-53	1	1-16
17	750551000024	STEEL BALL	钢球GCr15 D4	1	1-17
18	701307006003	SCREW	螺钉M6X10 GBT 77	1	1-18
19	730603001705	O-RING	O形圈21.89X2.62-NBR-A90 AS 568(Y)	1	1-19
20	AH00000276.1	CYLINDER BARREL	缸筒组件	1	1-20
21	AH00000278.1	PIPELINE MODULE 1	油管组件1	1	1-21
22	AH00000280.1	PIPELINE MODULE 2	油管组件2	1	1-22
23	701302008041	SCREW	M8X12.0-8.8-DKL GBT 70.1	2	1-23,1-23

动臂油缸(AH00000235)

BOOM CYLINDER

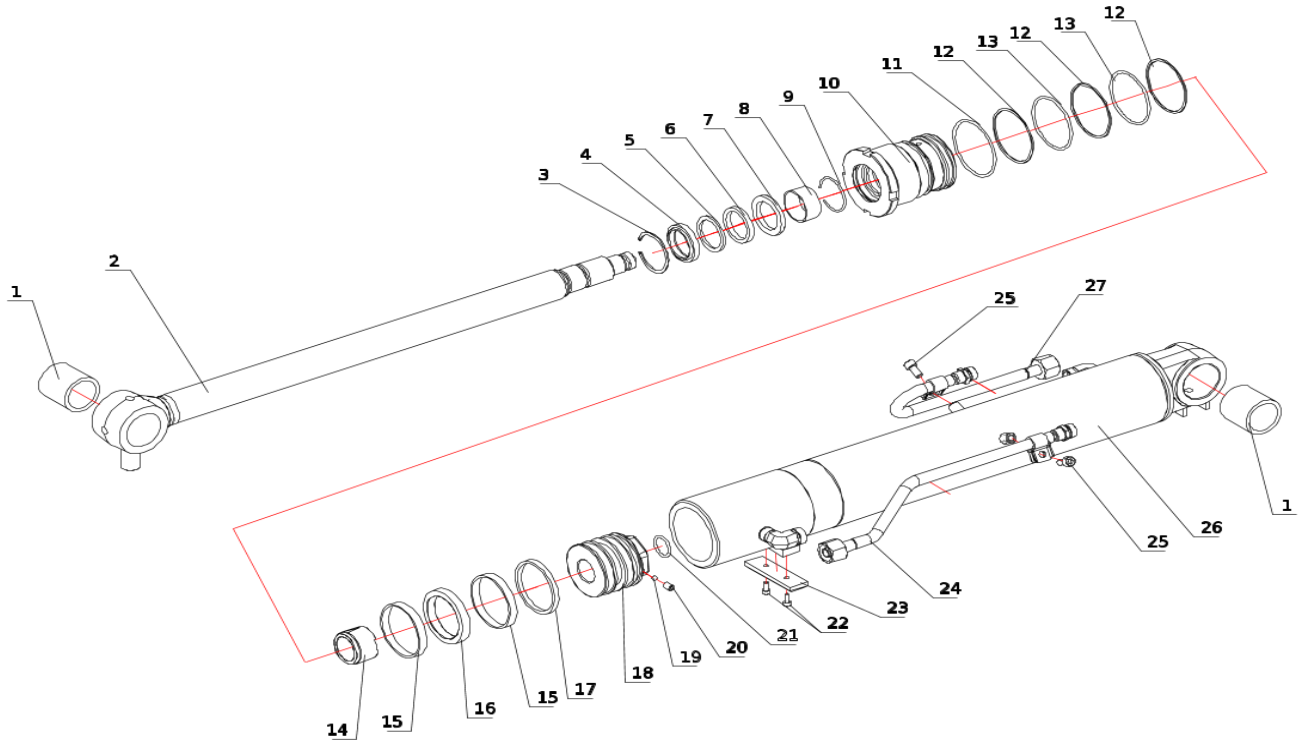

序号 POS	编码 CODE	DESCRIPTION	名称	数量 QTY	备注 remark
1	750502000640	BUSH	粉末冶金轴套40X50X49	2	1-1,1-1
2	AH00000238.1	PISTON ROD ASSEMBLY	活塞杆组件	1	1-2
3	302010007280.1	STOP COLLAR OF DUSTBAND	防尘圈挡圈40	1	1-3
4	730652000608	DUSTBAND	防尘圈DKWU 40X52X12 UT-10+SPCC	1	1-4
5	730654000818	STOP COLLAR	挡圈BKU 40X50X3 PTFE+Cu	1	1-5
6	730601000718	PISTON ROD SEAL PART	活塞杆密封URH 40X50X6 HNBR	1	1-6
7	730601000719	PISTON ROD SEAL PART	活塞杆密封BRW 40X55.5X6 UT-20+NYT	1	1-7
8	750502000029	SELF LUBRICATING BEARING	自润滑多层复合轴承MB4020	1	1-8
9	301020000032.1	CIRCLIP	弹簧挡圈44X2.5	1	1-9
10	AH00000244.1	CYLINDER HEAD	缸头M80X2-76-40-100	1	1-10
11	730603001746	O-RING	O形圈74.4X3.1-NBR-A70 JISB 2401(Y)	1	1-11
12	730654000810	STOP COLLAR	挡圈BKO 71X76X1.5 PTFE+Cu	3	1-12,1-12,1-12
13	730603001747	O-RING	O形圈69.4X3.1-NBR-A90 JISB 2401(Y)	2	1-13,1-13
14	AH00000246.1	CUSHION SEAL SHEATH	小腔缓冲套45X33.5X30	1	1-14
15	730651000581	GUIDING RING	导向环JT 70X75X9.7 PFC-6	2	1-15,1-15
16	730602000573	PISTON SEAL	活塞密封SPW 60X75X10.5 PNR+NBR+NYT	1	1-16
17	730602000574	ANTI-POLLUTION SEAL	纳污环KTR 67X75X6 PNB	1	1-17
18	AH00000245.1	PISTON	活塞M33X2-25-75-69	1	1-18
19	750551000003	STEEL BALL	钢球GCr15 D6	1	1-19
20	701307008012	SCREW	螺钉M8X12 GBT 77	1	1-20
21	730603001773	O-RING	O形圈24.4X3.1-NBR-A90 JISB 2401(Y)	1	1-21
22	701302005029	SCREW	螺钉M5X12-8.8-DKL GBT 70.1	2	1-22,1-22
23	AH00000249.1	SKATEBOARD	滑板	1	1-23
24	AH00000250.1	PIPELINE MODULE 1	油管组件1	1	1-24
25	701302008027	SCREW	螺钉M8X16-8.8-DKL GBT 70.1	2	1-25,1-25
26	AH00000240.1	CYLINDER BARREL	缸筒组件	1	1-26
27	AH00000252.1	PIPELINE MODULE 2	油管组件2	1	1-27

偏转头安装(ACE0000239)

DEFLECTING UNIT INSTALL

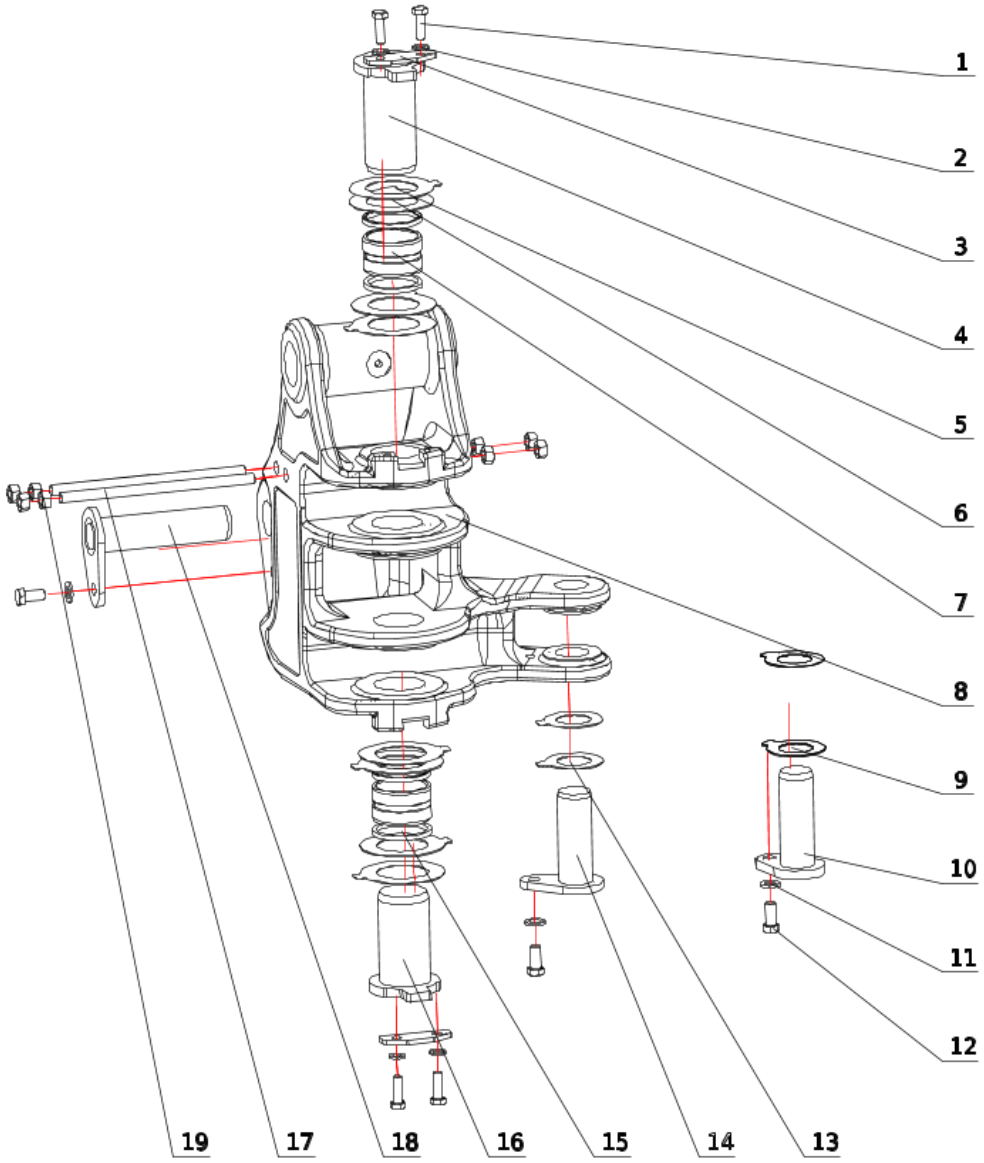

序号 POS	编码 CODE	DESCRIPTION	名称	数量 QTY	备注 remark
1	701104010039	BOLT	螺栓M10X30-8.8-DKL GB/T 5783	4	1-1
2	701504010004	WASHER	垫圈10-DKL GBT 97.1	4	1-2
3	ACE0000228.1	PRESSING PLATE	压板	2	1-3
4	ACE0000214.1	PIN ASSEMBLY 60X114	轴组件60X114	1	1-4
5	750911000035	RESIN ADJUSTMENT PAD	树脂调整垫Φ 100XΦ 61X1	4	1-5
6	750911000050	RESIN ADJUSTMENT PAD	树脂调整垫Φ 100XΦ 61X1.5	4	1-6
7	ACE0000273.1	PIN BUSH60X39	轴套60X39	2	1-7
8	ACE0000115.1	DEFLECTING UNIT	偏转头	1	1-8
9	750911000034	RESIN ADJUSTMENT PAD	树脂调整垫Φ 70XΦ 41X1.5	2	1-9
10	ACE0000204.1	PIN ASSEMBLY 40X109	轴组件40X109	1	1-10
11	701504012005	WASHER	垫圈12-DKL GBT 97.1	3	1-11
12	701104012022	BOLT	螺栓	3	1-12
13	750911000033	RESIN ADJUSTMENT PAD	树脂调整垫Φ 70XΦ 41X1	4	1-13
14	ACE0000224	PIN ASSEMBLY	轴组件40X104.5	1	1--14
15	730652000206	DUST RING	防尘圈DLW 60X70X5	4	1-15
16	ACE0000211.1	PIN ASSEMBLY 60X104	轴组件60X104	1	1-16
17	ACE0000227.1	PIPE PRESSURE LEVER	胶管压杆	2	1-17
18	ACE0000229.1	PIN ASSEMBLY 40X162	轴组件40X162	1	1-18
19	701406012002	NUT	螺母M12-10-DKL GBT 6170	8	1-19

斗杆总成-null(ACE0000508)

BUCKET ROD ASSEMBLY

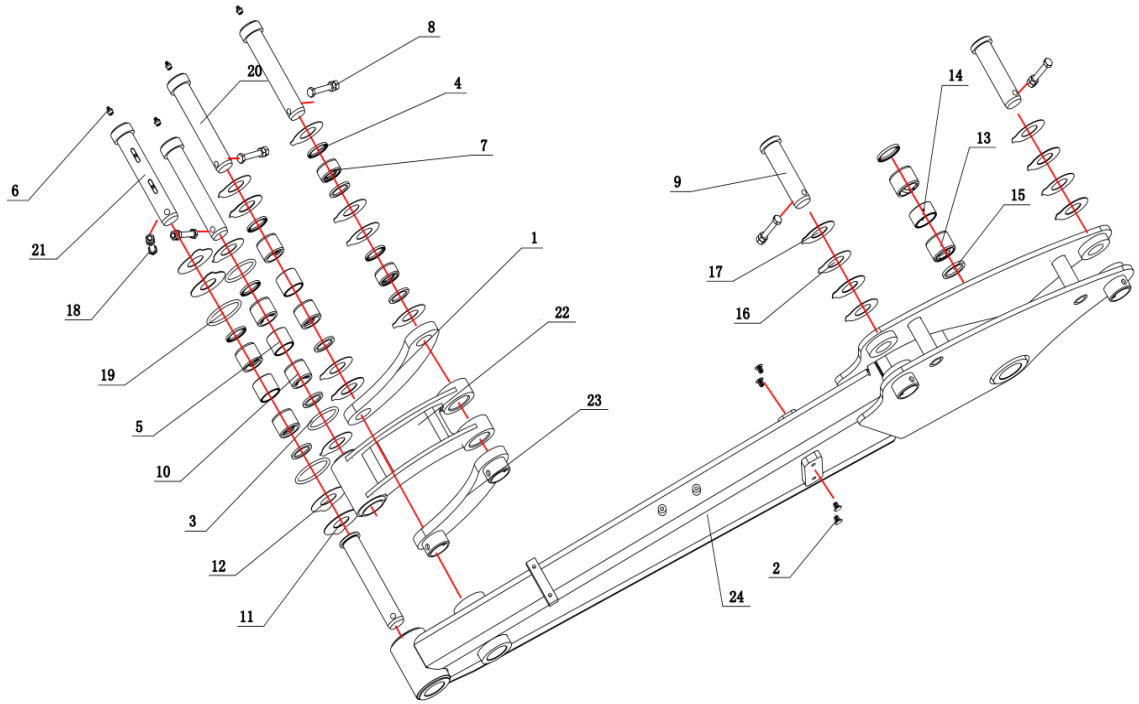

序号 POS	编码 CODE	DESCRIPTION	名称	数量 QTY	备注 remark
1	ACE0000502.1	RIGHT ROCKER ARM	右摇臂	1	1-1
2	750006010083	RUBBER PLASTIC PLUG	橡塑堵头M8	4	1-2
3	703201060004	O-SHAPED CIRCLE	O形圈60X5.3-G-N GB/T 3452.1	2	1-3
4	730652000027	DUST RING	防尘圈DLW03501 45X35X4	10	1-4
5	ACE0000525.1	SPACER SLEEVE	隔套38X44.5X35	3	1-5
6	703101010001	OIL CUP	油杯M10X1(钢制) JB/T 7940.1进口	5	1-6
7	ACE0000527.1	SHAFT SLEEVE	轴套3	2	1-7
8	701406010006	NUT	螺母M10-10-DKL GB/T 6170	12	1-8
9	ACE0000533.4	PIN SHAFT	圆头销轴 35X116	2	1-9
10	ACE0000534.2	SHAFT SLEEVE	轴套1	6	1-10
11	750911000046	RESIN GASKET	树脂调整垫Φ 80XΦ 36X1.5	2	1-11
12	750911000023	RESIN GASKET	树脂调整垫Φ 80XΦ 36X1	2	1-12
13	ACE0000536.1	SHAFT SLEEVE	轴套2	2	1-13
14	ACE0000537.1	SPACER SLEEVE	隔套42X50X26	1	1-14
15	730652000026	DUST RING	防尘圈DLW04002 50X40X5	2	1-15
16	750911000028	RESIN GASKET	树脂调整垫Φ 70XΦ 36X1	12	1-16
17	750911000049	RESIN GASKET	树脂调整垫Φ 70XΦ 36X1.5	6	1-17
18	701103010073	BOLT	螺栓M10X70-10.9-DKL GB/T 5782	6	1-18
19	703201069003	O-SHAPED CIRCLE	O形圈69X5.3-G-N GB-T 3452.1	2	1-19
20	ACE0000526.2	PIN SHAFT	圆头销轴 Y125X35X169	2	1--20
21	ACE0001741.1	ROUND HEAD PIN	圆头销轴 Y123X35X177	2	1--21
22	ACE0000465.2	CONNECTING ROD WELDING	连杆焊接	1	1--22
23	ACE0000503.1	LEFT ROCKER ARM WELDING	左摇臂焊接	1	1--23
24	ACE0000461.3	BUCKET BAR WELDING	斗杆焊接	1	1--24

偏转油缸(AH00000282)

DEFLECTION CYLINDER

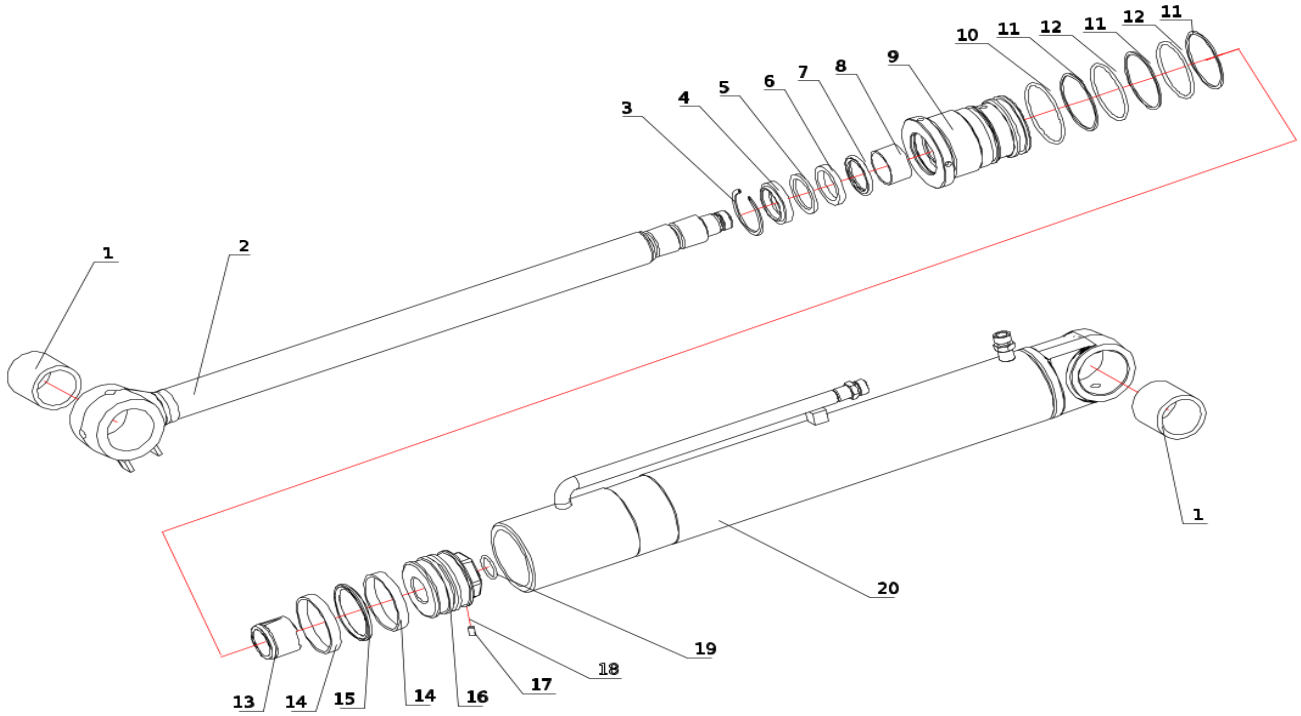

序号 POS	编码 CODE	DESCRIPTION	名称	数量 QTY	备注 remark
1	750502000640	BUSH	粉末冶金轴套40X50X49	2	1-1,1-1
2	AH00000285.2	PISTON ROD ASSEMBLY	活塞杆组件	1	1-2
3	302010007204.1	STOP COLLAR OF DUSTBAND	挡圈	1	1-3
4	730652000602	DUSTBAND	防尘圈HWGA 35X47X10 M2112A	1	1-4
5	730654000094	STOP COLLAR	挡圈DQ 35X45X3 S102	1	1-5
6	730601000596	PISTON ROD SEAL PART	活塞杆密封HRSD 35X45X6 P2112	1	1-6
7	730601000660	PISTON ROD SEAL PART	活塞杆密封GSJ 35X45.7X3.9 MA01	1	1-7
8	750502000028	SELF LUBRICATING BEARING	自润滑多层复合轴承MB3520	1	1-8
9	AH00000286.1	CYLINDER HEAD	缸头M70X2-66-35-95	1	1-9
10	730603001668	O-RING	O形圈64.4X3.1-NBR-A70 JISB 2401(W)	1	1-10
11	730654000769	STOP COLLAR	挡圈DQ 61X66X1.5 S106	3	1-11,1-11,1-11
12	730603001650	O-RING	O形圈59.4X3.1-NBR-A90 JISB 2401(W)	2	1-12,1-12
13	AH00000287.1	CUSHION SEAL SHEATH	小腔缓冲套40X30.5X30	1	1-13
14	730651000547	GUIDING RING	导向环HGR 60X65X9.7 S108-3	2	1-14,1-14
15	730602000567	PISTON SEAL	活塞密封GPP 54X65X4 MA01	1	1-15
16	AH00000273.1	PISTON	活塞M30X2-22-65-53	1	1-16
17	701307006003	SCREW	螺钉M6X10 GBT 77	1	1-17
18	750551000024	STEEL BALL	钢球GCr15 D4	1	1-18
19	730603001716	O-RING	O形圈21.89X2.62-NBR-A90 AS 568(W)	1	1-19
20	AH00000291.1	CYLINDER BARREL	缸筒组件	1	1-20

工作装置液压系统(ACE0000624)

WORKING DEVICE PIPELINE ASSEMBLY

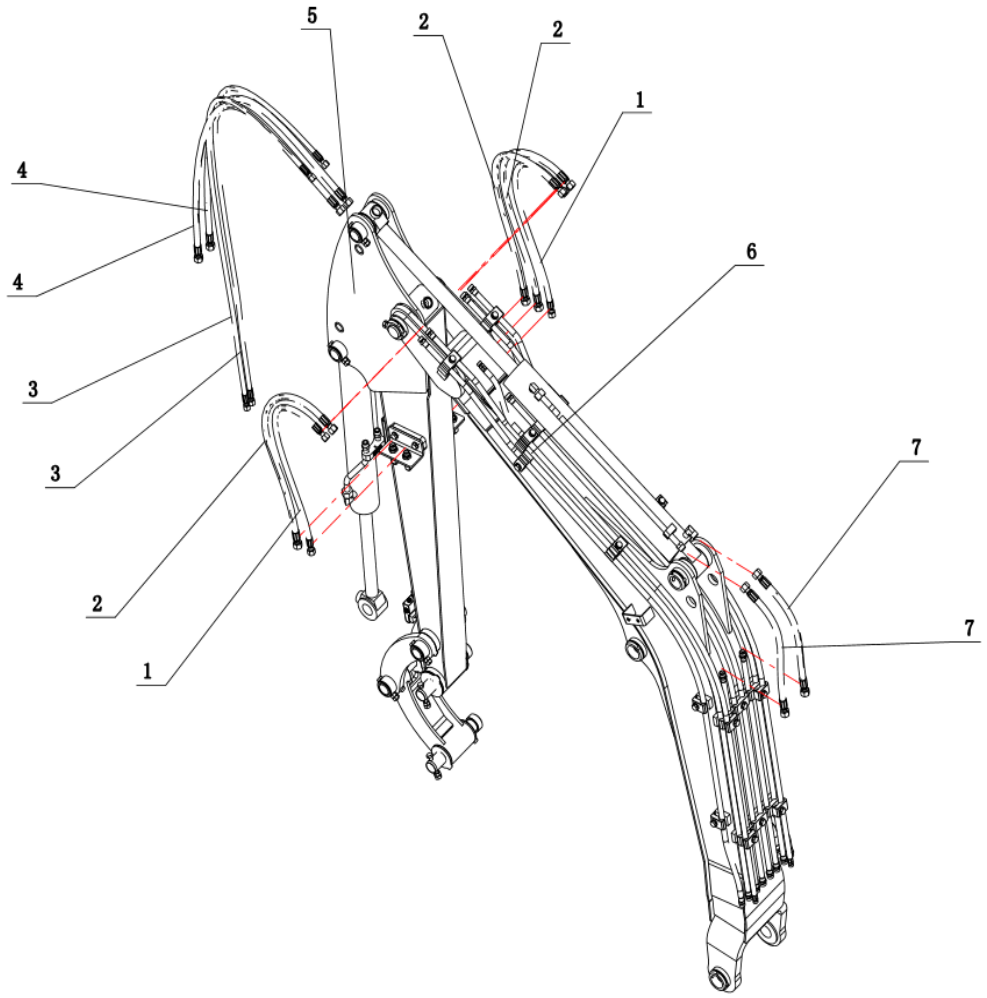

序号 POS	编码 CODE	DESCRIPTION	名称	数量 QTY	备注 remark
1	730501005445	HOSE ASSEMBLY	胶管总成F431CACA101005-740-SG-740	2	1-1,1-1
2	730501005444	HOSE ASSEMBLY	胶管总成F431CACA121206-800-SG-800	3	1-2,1-2,1-2
3	73050100A373	HOSE ASSEMBLY	胶管总成F431CACA080804-1450-PS-1450	2	1--3
4	73050100A399	HOSE ASSEMBLY	胶管总成F431CACA121206-1170-PS-1170	2	1--4
5	ACE0000638.2	WORK DEVICE ARM HYDRAULIC PIPELINE ASSEMBLY	斗杆背部管路安装	1	1-5
6	ACE0000625.2	WORK DEVICE BOOM HYDRAULIC PIPELINE ASSEMBLY	动臂背部管路安装	1	1-6
7	73050100A398	HOSE ASSEMBLY	胶管总成F431CACA121206-450-PS-450	1	1--7

斗杆背部管路安装(ACE0000638)

WORK DEVICE ARM HYDRAULIC PIPELINE ASSEMBLY

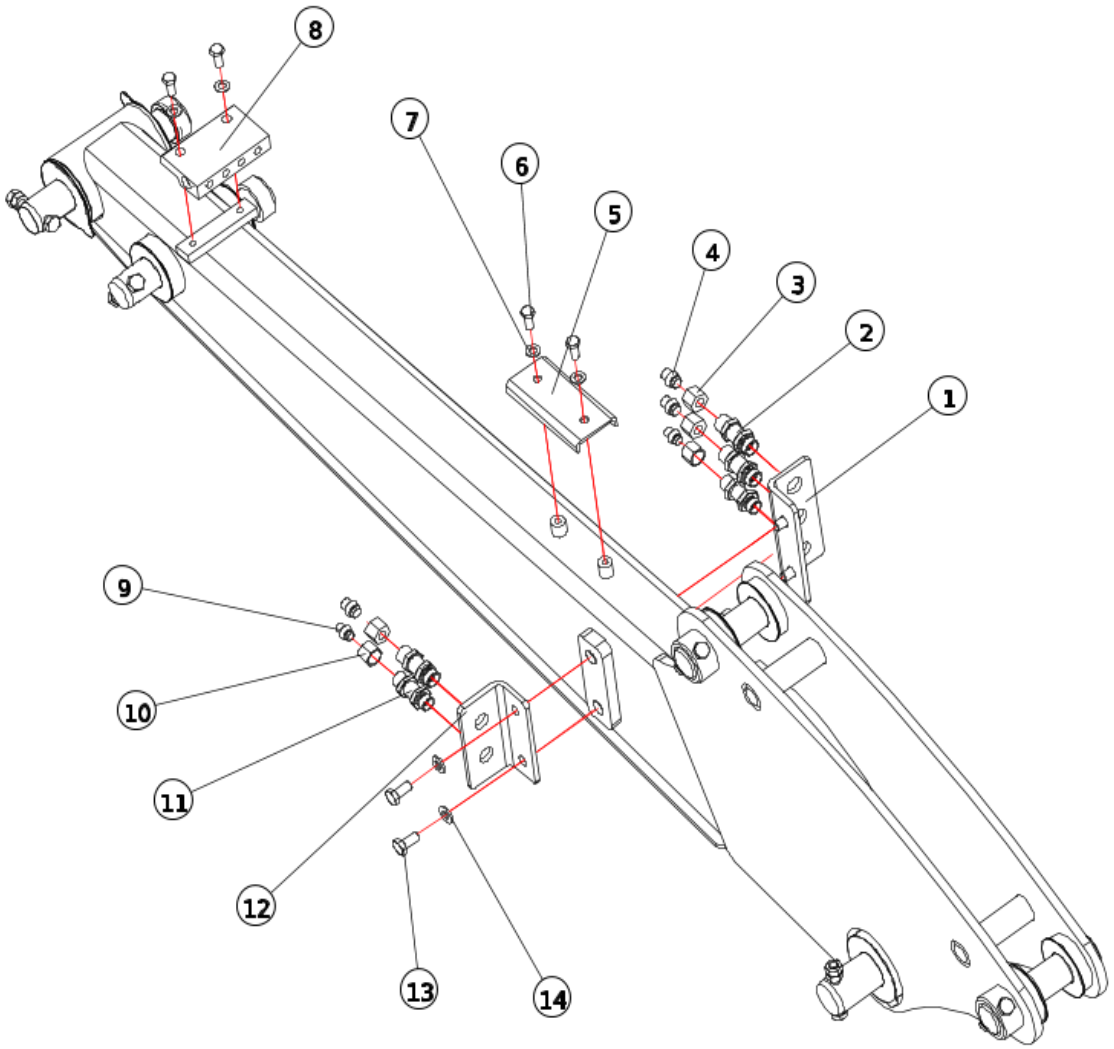

序号 POS	编码 CODE	DESCRIPTION	名称	数量 QTY	备注 remark
1	ACE0000640.1	BRACKET	隔板接头安装右支架	1	1-1
2	730101000372	CROSS WALL JOINT	直通隔板接头SV12LOMDA3C	3	1-2
3	730199000056	NUT	螺母M12LA3CX	3	1--3
4	739806000032	PLUG, CONE	锥孔堵头VKA12A3C	3	1-4
5	ACE0000637.2	PLATEN	斗杆背部胶管压板	1	1-5
6	701104008031	BOLT	螺栓M8X20-8.8-DKL GB/T 5783	4	1-6
7	701504008005	WASHER	垫圈8.0200 HV-DKL GBT 97.1	4	1-7
8	ACE0000168.1	TWO-WAY COMBINATION BLOCK	两通组合块	1	1-8
9	739806000030	PLUG, CONE	锥孔堵头VKA10A3C	2	1-9
10	730199000055	NUT	螺母M10LA3CX	2	1-10
11	730101000224	CROSS WALL JOINT	直通隔板接头SV10LOMDA3C	2	1-11
12	ACE0000639.2	BRACKET	隔板接头安装左支架	1	1-12
13	701302010092	SCREW	螺钉M10X20-10.9-DKL GBT 70.1	4	1-13
14	701504010004	WASHER	垫圈10-DKL GBT 97.1	4	1-14

两通组合块接头安装(ACE0000131)

TWO WAY COMBINATION VAVLE

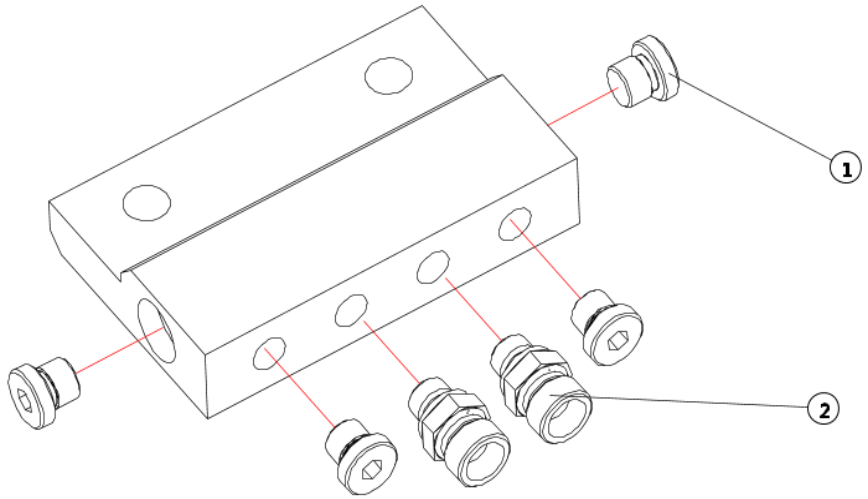

序号 POS	编码 CODE	DESCRIPTION	名称	数量 QTY	备注 remark
1	730199000321	PLUG, SOCKET	内六角油口堵头VSTI1/8EDA3C	4	1-1
2	730101000119	MAL STUD FITTING	端直通接头GE08LR1/8EDOMDA3C	2	1-2

动臂背部管路安装(ACE0000625)

WORK DEVICE BOOM HYDRAULIC PIPELINE ASSEMBLY

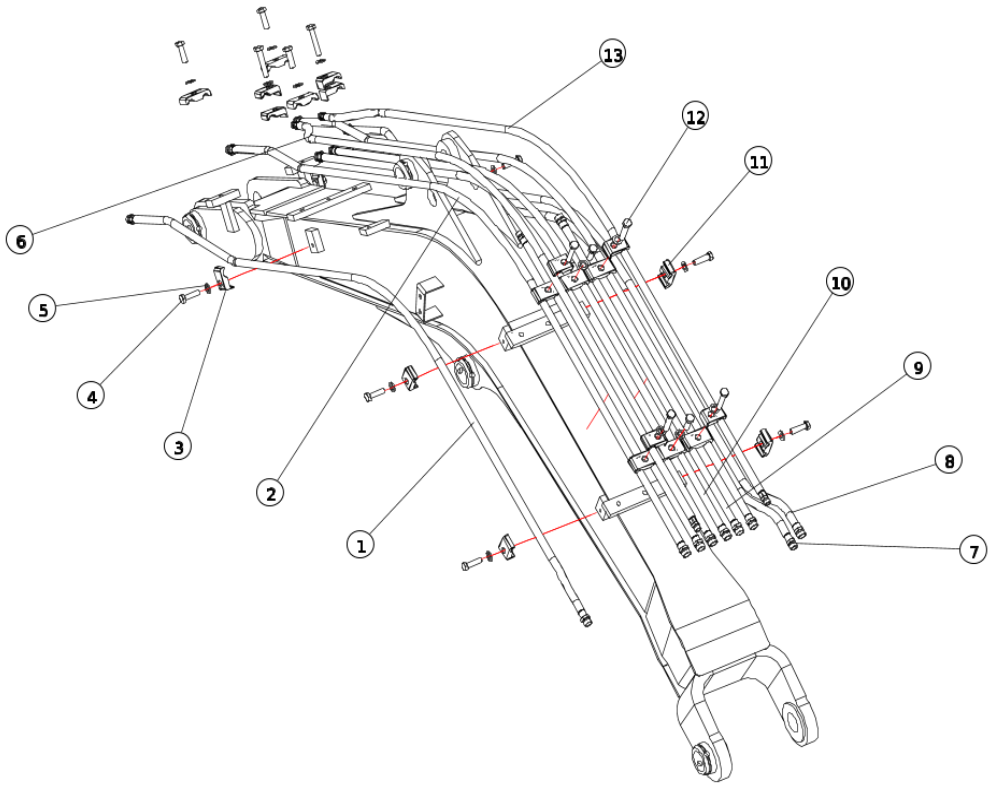

序号 POS	编码 CODE	DESCRIPTION	名称	数量 QTY	备注 remark
1	ACE0000626.1	STEER PIPE	辅具左侧钢管总成	1	1-1
2	ACE0000634.1	STEER PIPE	破碎钢管总成	2	1-2
3	ACE0000632.1	PIPE CLIP	单孔管夹D15-A-彩锌	12	1-3
4	701104010040	BOLT	螺栓M10X35-8.8-DKL GB/T 5783	12	1-4
5	701508010001	WASHER	垫圈10-DKL GBT 1230	18	1-5
6	ACE0000628.1	STEER PIPE	液压快换锁左侧钢管总成	1	1-6
7	ACE0000629.2	STEER PIPE	辅具右侧钢管总成	1	1-7
8	ACE0000630.1	STEER PIPE	大回油钢管总成	1	1-8
9	ACE0000636.1	STEER PIPE	斗杆钢管总成	2	1-9
10	ACE0000635.1	STEER PIPE	铲斗钢管总成	2	1-10
11	ACE0000633.1	PIPE CLIP	双孔管夹2XD15-L34-A-彩锌	12	1-11
12	701103010054	BOLT	螺栓M10X55-10.9-DKL GB-T 5782	6	1-12
13	ACE0000631.1	STEER PIPE	液压快换锁右侧钢管总成	1	1-13

CFG35UF-621铲斗总成选配表-null(ACE0001657)

CFG35UF-621BUCKET ASSEMBLY SELECTION TABLE

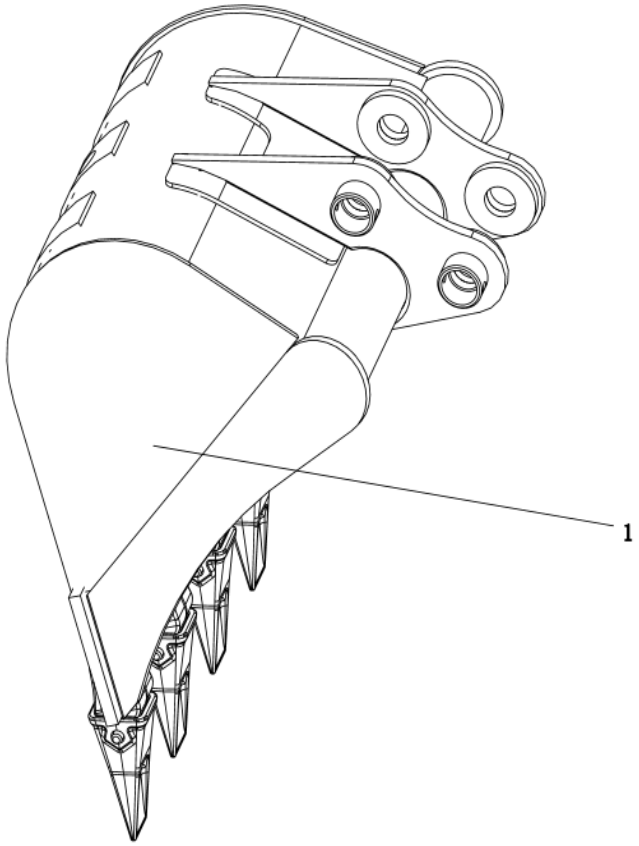

序号 POS	编码 CODE	DESCRIPTION	名称	数量 QTY	备注 remark
1	ACE0000275.3	CFG35UF STANDARD BUCKET ASSEMBIY (580. 0.08)	CFG35UF标准铲斗总成（580，0.08）	1	1--1

CFG35UF标准铲斗总成（580，0.08）(ACE0000275)

CFG35UF STANDARD BUCKET ASSEMBIY (580，0.08)

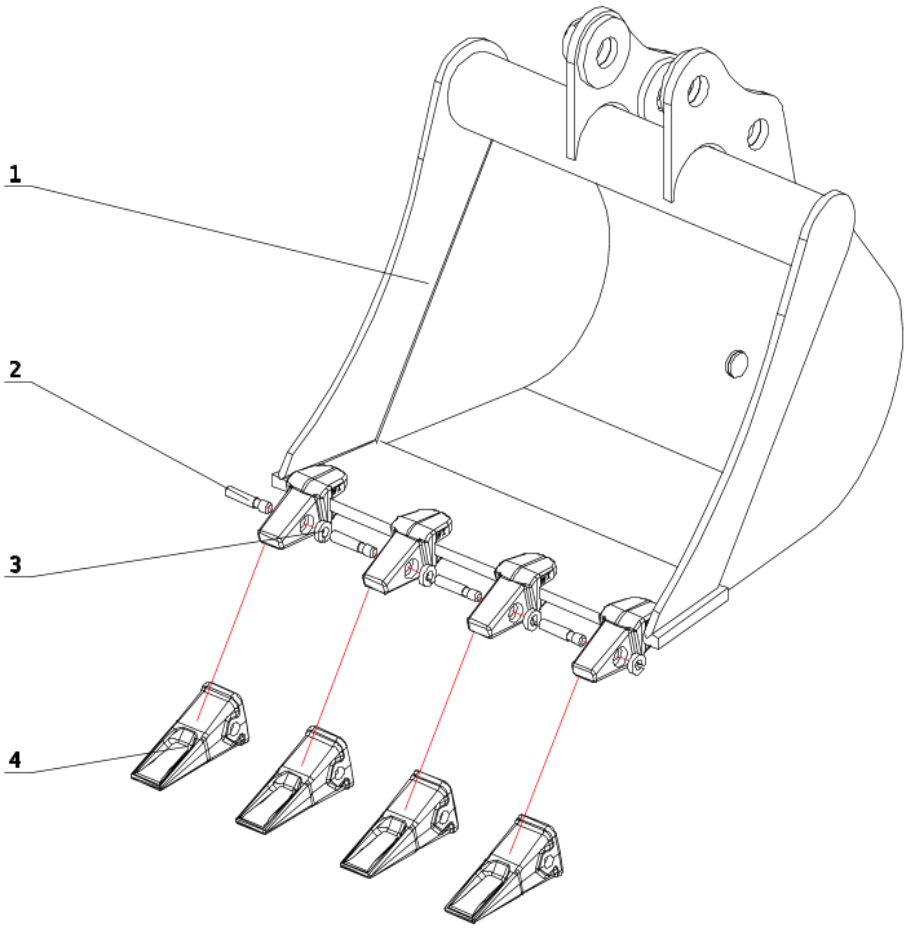

序号 POS	编码 CODE	DESCRIPTION	名称	数量 QTY	备注 remark
1	ACE0000276.2	CFG35UF STANDARD BUCKET(580，0.08)	CFG35UF标准铲斗（580，0.08）	1	1-1,2-1
2	750601000265	PEG	销子3202A	4	1-2,2-2
3	750601000266	SPRING	卡簧3202B	4	1-3,2-3
4	750601000263	DIG BUCKET TEETH	斗齿IU3202	4	1-4,2-4

动臂总成-null(ACE0000644)

SWING ARM ASSEMBLY

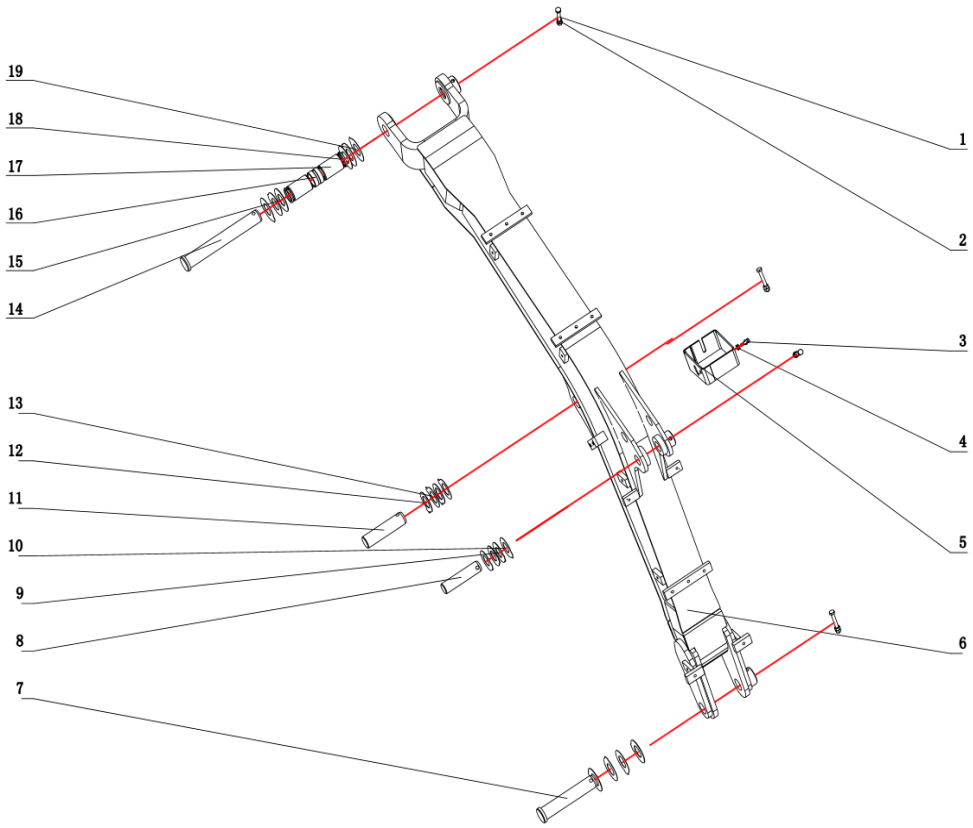

序号 POS	编码 CODE	DESCRIPTION	名称	数量 QTY	备注 remark
1	701103010042	BOLT	螺栓M10X75-10.9-DKL GB/T 5782	4	1-1
2	701406010006	NUT	螺母M10-10-DKL GB/T 6170	8	1-2
3	701104081601	BOLT	螺栓M8X16-10.9-DKL GBT 5783	4	1-3
4	701508008001	WASHER	垫圈8-DKL GBT 1230	4	1-4
5	ACE0000690.1	LEFT LAMPSHADE	左灯罩	1	1-5
6	ACE0000645.4	SWING ARM SOLDERING	动臂焊接	1	1-6
7	ACE0000535.1	PIN SHAFT	圆头销轴 40X190	1	1-7
8	ACE0000703.1	PIN 35X142	销轴35X142	1	1-8
9	750911000049	RESIN GASKET	树脂调整垫Φ 70XΦ 36X1.5	2	1-9
10	750911000028	RESIN GASKET	树脂调整垫Φ 70XΦ 36X1	2	1-10
11	ACE0000702.1	PIN 40X153	销轴40X153	1	1-11
12	750911000034	RESIN GASKET	树脂调整垫Φ 70XΦ 41X1.5	2	1-12
13	750911000033	RESIN GASKET	树脂调整垫Φ 70XΦ 41X1	2	1-13
14	ACE0000699.1	PIN 40X271	圆头销轴40X271	1	1--14
15	750911000051	RESIN GASKET	树脂调整垫Φ 80XΦ 41X1.5	4	1-15
16	ACE0000701.1	PIN BUSH 50X35X4	衬套50X35X4	1	1-16
17	ACE0000700.1	PIN BUSH 50X74X5	轴套50X74X5	2	1-17
18	730652000026	DUST RING	防尘圈DLW04002 50X40X5	2	1-18
19	750911000030	RESIN GASKET	树脂调整垫Φ 80XΦ 41X1	6	1-19

SW-II型驾驶室总成-null(ACE0001671)

SW-II CAB ASSEMBLY

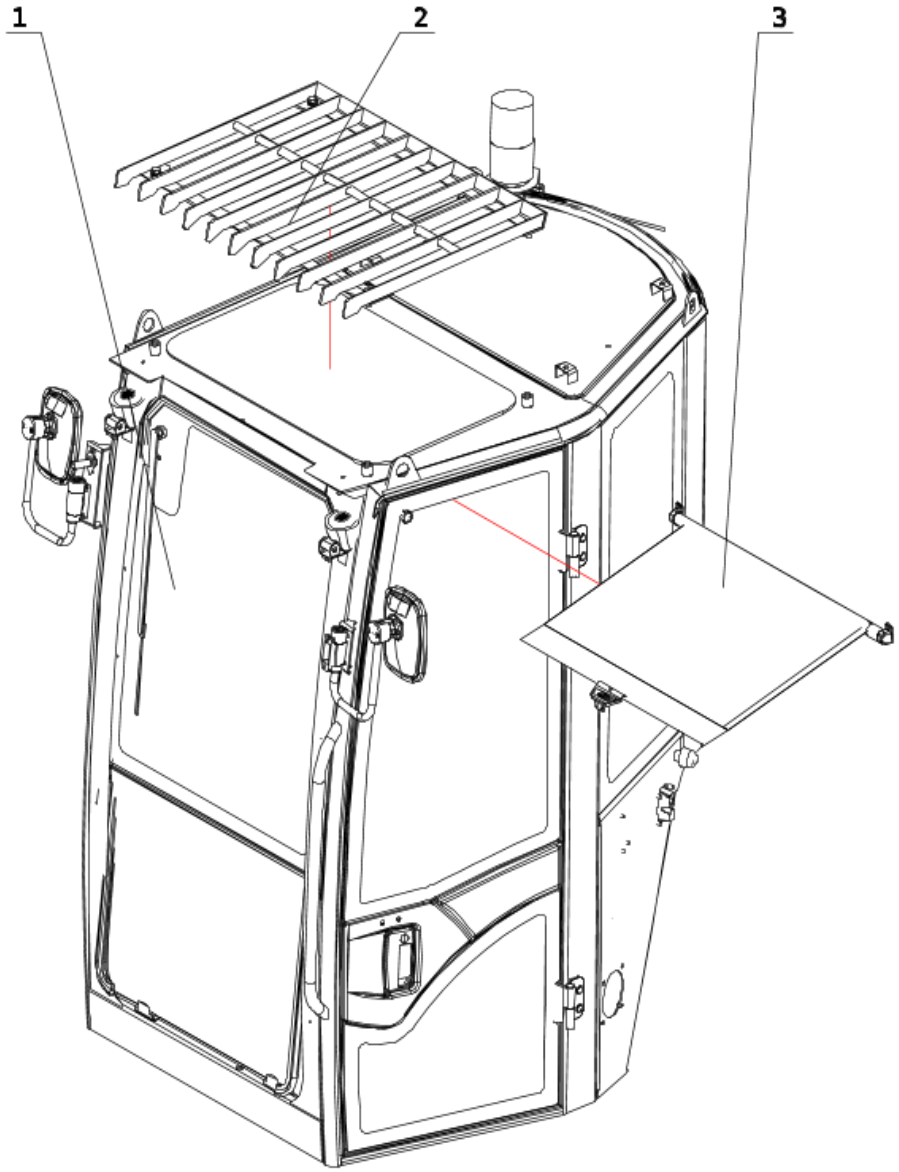

序号 POS	编码 CODE	DESCRIPTION	名称	数量 QTY	备注 remark
1	PCB0000006.2	SW-Ⅱ CAB	SW-Ⅱ型驾驶室	1	1-1
2	ACB0002438.1	TOP GUARDRAIL INSTALLATION	顶护栏安装	1	1--2
3	750719000481	SUNSHADE CURTAIN, TOP	SW25UF-无尾驾驶室顶遮阳帘	1	1-3

SW-Ⅱ型驾驶室(PCB0000006)

SW-ⅡCAB

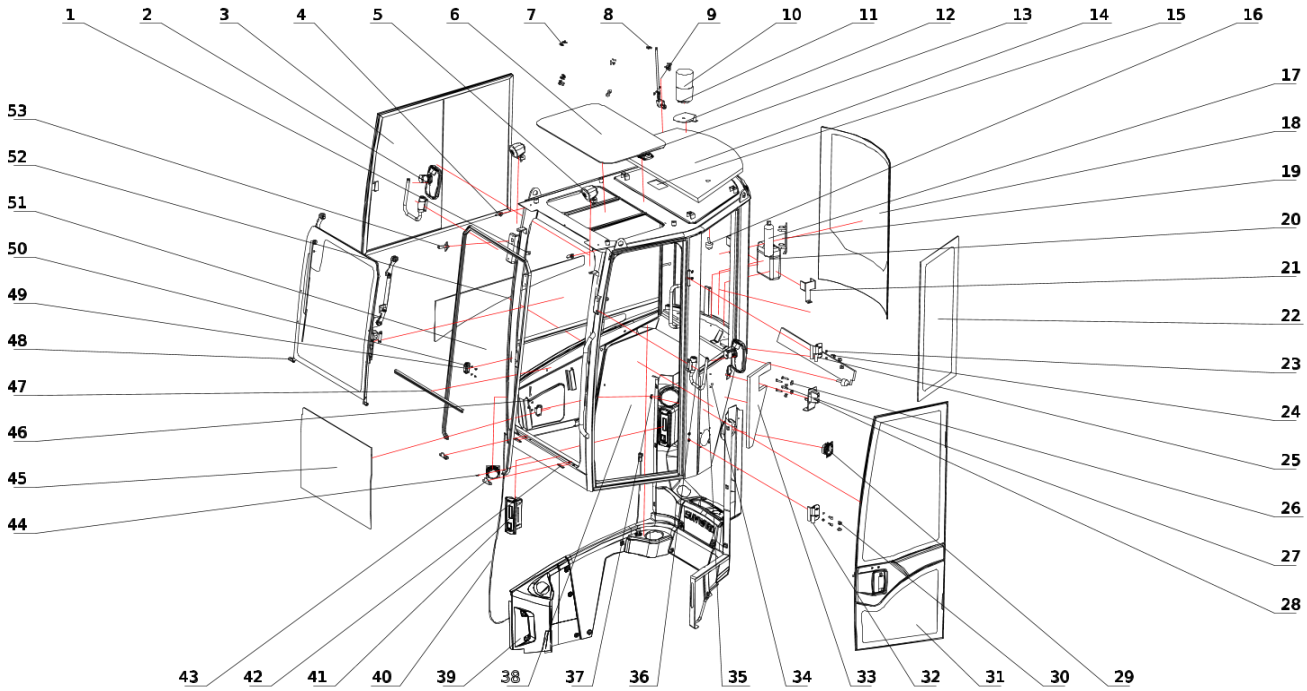

序号 POS	编码 CODE	DESCRIPTION	名称	数量 QTY	备注 remark
1	ACB0000262.2	CAB WELDING	驾驶室焊合	1	1-1
2	750603000018	REFLECTOR ASSEMBLY	反光镜总成V7120.320	2	1-2
3	750711000111	RIGHT MOVABLE WINDOW ASSEMBLY	右活动窗总成SW-Ⅱ	1	1-3
4	750006010018	LAMP POWER CORD VIA SHEATH	灯电源线过孔护套φ11	3	1-4
5	720214000210	WORKING LIGHT, LED	LED工作灯CJTD-10W1-20A	2	1-5
6	ACB0000377.1	TOP GLASS SW-Ⅱ	顶玻璃SW-Ⅱ	1	1-6
7	701104006017	BOLT	螺栓M6X16-8.8-DKL GB/T 5783	8	1-7
8	701324006010	SCREW M6X20-8.8-ZND GB/T 70.3	螺钉M6X20-8.8-ZnD GBT 70.3	2	1-8
9	720226000006	RUBBE ANTENNA	天线	1	1-9
10	720412000477	WARNING LIGHT	警示灯AD11-J90CA/HZ33Y02/X9S-SW2	1	1--10
11	750005000032	WATER PIPE	水管SG4-A 4.5m	1	1-11
12	ACB0000424.1	POLICE LAMP BRACKET WELDING	警灯支架焊合	1	1-12
13	750719000252	INTERIOR LIGHTS	内饰灯SL-06 DC 12V LED	1	1-13
14	ACB0000411.1	TOP SPONGE	CFG35UF顶海绵	1	1-14
15	ACB0000383.1	DRIVER'S ROOM ENGLISH NAMPLATE BELOW 6T	司机室英文铭牌6T以下	1	1-15
16	750906000082	LIMIT BOLT	螺栓	3	1-16
17	750719000185	FIRE EXTINGUISHER IN THE DRIVER'S CABIN	司机室灭火器MFJ500	1	1-17
18	ACB0000381.1	THE BACK GLASS SW-Ⅱ	后玻璃SW-Ⅱ	1	1-18
19	750629000008	CAB FIRE EXTINGGUISHER BRACKET	司机室灭火器支架	1	1-19
20	720405000097	WASHER ASSEMBLY	洗涤器总成XD106D-25(12V)	1	1-20
21	ACB0000386.1	WASHER BRACKET	洗涤器支架	2	1-21
22	ACB0000378.1	LEFT REAR GLASS SW-Ⅱ	左后玻璃SW-Ⅱ	1	1-22
23	701510008001	WASHER	垫圈8-ZnD GBT 93	8	1-23
24	701104008031	BOLT	螺栓M8X20-8.8-DKL GB/T 5783	8	1-24
25	ACB0000408.1	SPONGE AT THE BACK	后下海绵	1	1-25
26	701506008002	WASHER	垫圈8-DKL GBT 96.1	6	1-26
27	701104008034	BOLT	螺栓M8X35-8.8-DKL GB/T 5783	6	1-27
28	750906000281	DOOR LATCH ASSEMBLY	门碰锁总成SW-Ⅱ	1	1-28
30	ACB0000423.1	DOOR HINGED NUT CAP	门铰链螺帽盖SW-Ⅱ	4	1-30
31	ACB0000388.1	DOOR ASSEMBLY	门总成	1	1-31
32	ACB0000415.1	DOOR HINGE ASSEMBLY	门铰链总成	2	1-32
33	ACB0000410.1	LEFT REAR SPONGE	左后海绵	1	1-33

SW-Ⅱ型驾驶室(PCB0000006)

SW-ⅡCAB

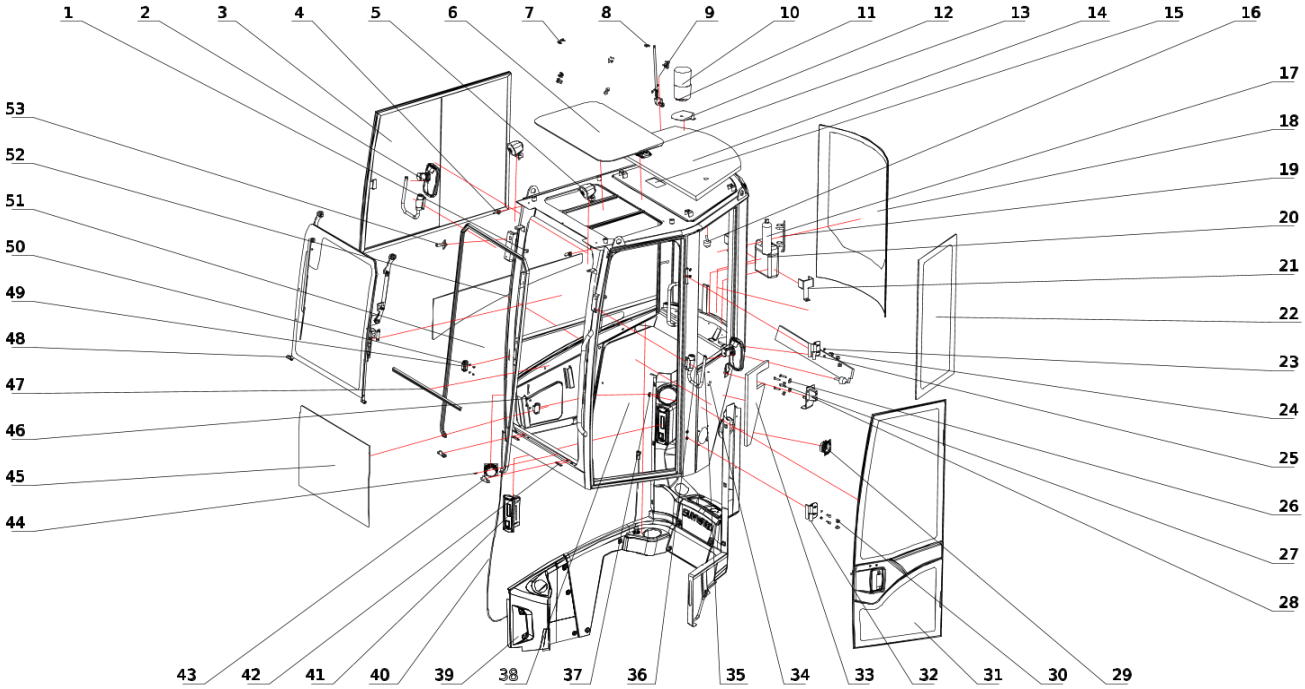

序号 POS	编码 CODE	DESCRIPTION	名称	数量 QTY	备注 remark
34	701104006021	BOLT	螺栓M6X25-8.8-DKL GB/T 5783	3	1-34
35	701502006002	WASHER	垫圈6-DKL GBT 96.2	1	1--35
36	750603000019	REFLECTOR HOLDER ASSEMBLY	反光镜支架总成7200.061	2	1-36
37	751103000316	NUT	Q312 B型板簧螺母M6	1	1-37
38	760505000025	GLUE	西卡聚氨酯玻璃粘接胶600ml/支	1	1--38
39	ACB0000420.1	INTERIOR ASSEMBLY	SW-II内饰总成	1	1-39
40	ACE0000641.2	PIATFORM HARNESS	CFG35UF司机室电气安装	1	1-40
41	720404000033	RADIO	收音机HS-BU0113	1	1-41
42	ACB0000384.1	WATERPROOF GASKET	防水垫片	2	1-42
43	750099000345	FRONT LOWER GLASS LOCATING CARD	前下玻璃定位卡CFG17-22	2	1-43
44	750001000127	PRESSING PLATE RUBBER STRIP	前下玻璃压板胶条SW-Ⅱ	1	1-44
45	ACB0000405.1	FRONT AND LOWER GLASS SW-Ⅱ	前下玻璃SW-Ⅱ	1	1-45
46	701309005001	SCREW M5X10-ZND GB/T 818	螺钉M5X10-ZnD GB/T 818	4	1-46
47	750001000068	STRIP SW-II FRONT LOWER GLASS	前窗密封胶条SW-Ⅱ	1	1-47
48	ACB0000343.1	FLIP WINDOW ASSEMBLY	翻转窗总成	1	1-48
49	ACB0000385.1	FRONT AND LOWER GLASS LIMIT BLOCK SW-II	前下玻璃限位块SW-II	2	1-49
50	701504005004	WASHER	垫圈5-ZnD GBT 97.1	4	1-50
51	750001000081	TURNING WINDOW SEALING RUBBER	翻转窗密封胶条SW-Ⅱ	1	1-51
52	ACB0000409.1	LOWER RIGHT GLASS	右下玻璃SW-Ⅱ	1	1-52
53	720405000034	WIPER NOZZLE	雨刮器	1	1-53

CFG35UF司机室电气安装(ACE0000641)

PIATFORM HARNESS

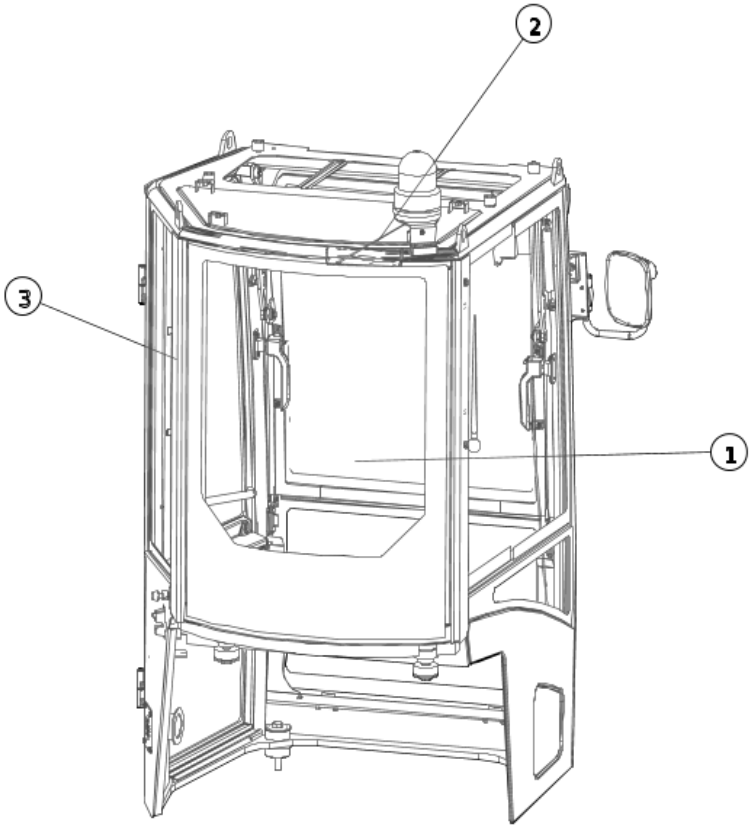

序号 POS	编码 CODE	DESCRIPTION	名称	数量 QTY	备注 remark
1	ACE0000642.1	PIATFORM HARNESS	CFG35UF司机室线束	1	1-1
2	ACE0000643.1	PIATFORM HARNESS	25U驾驶室后照灯线束	1	1-2
3	720103000051	SPRING WIRE	弹簧线RVUT4X0.5	1	1-3

翻转窗总成(ACB0000343)

FLIP WINDOW ASSEMBLY

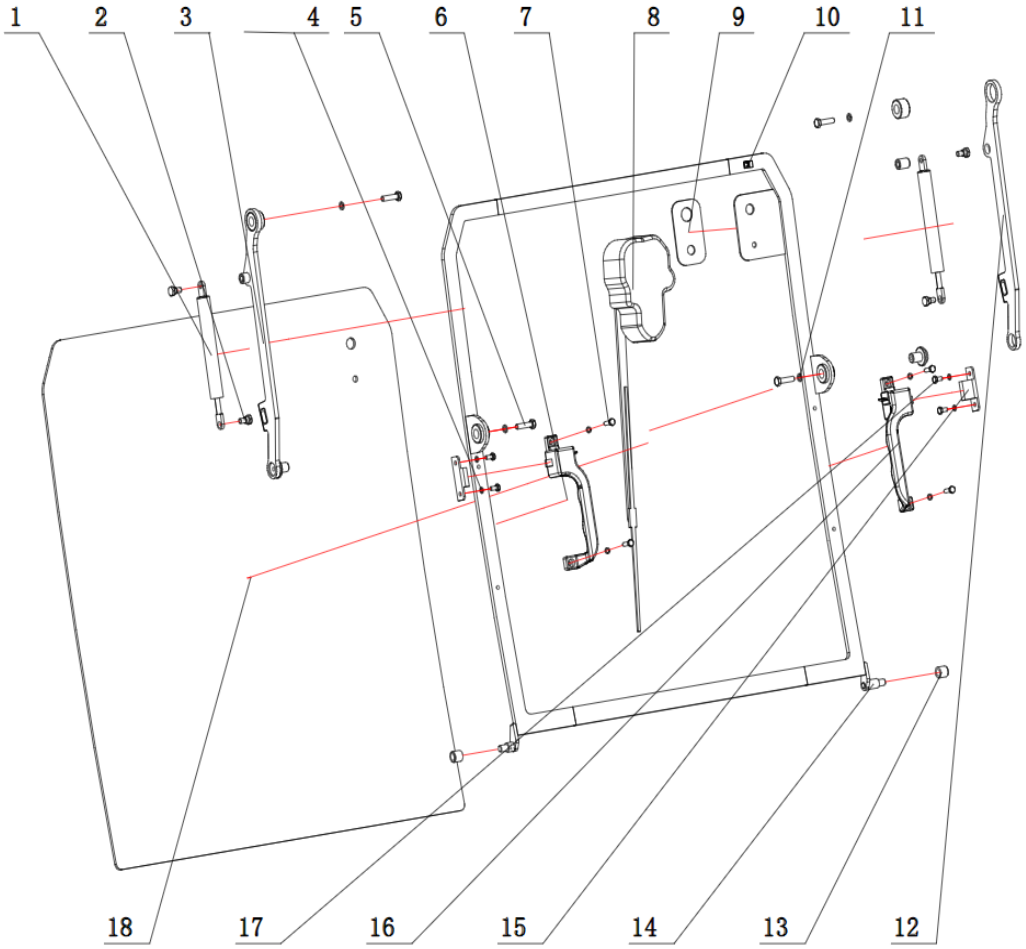

序号 POS	编码 CODE	DESCRIPTION	名称	数量 QTY	备注 remark
1	ACB0000361.1	POLICE LAMP BRACKET WELDING	气弹簧320-110-400N	2	1-1
2	ACB0000413.1	Flip window bolts	SW-II翻转窗螺栓	4	1-2
3	ACB0000365.1	LEFT ROCKER WELDING	左摇臂焊合	1	1-3
4	701510006002	WASHER	垫圈6-ZnD GBT 93	8	1-4
5	701104008037	BOLT	螺栓M8X30-8.8-DKL GB/T 5783	4	1-5
6	ACB0000364.1	FRONT WIND WINDWO POSITIONING LOCK ATL-CFG35-040201	前风窗定位锁ATL-CFG35-040201	1	1-6
7	701104006020	BOLT	螺栓M6X20-8.8-DKL GB/T 5783	4	1-7
8	ACB0000422.1	WIPER ASSEMBLY	雨刮器总成	1	1-8
9	ACB0000421.1	WIPER INSTALLATION PADS	雨刮器安装垫片	1	1-9
10	729808000044	WIRE CLAMP	线卡1104 线孔6.3 安装孔9	1	1-10
11	701510008001	WASHER	垫圈8-ZnD GBT 93	4	1-11
12	ACB0000356.1	RIGHT ROCKER WELDING	右摇臂焊合	1	1-12
13	ACB0000363.1	FLIP WINDOW ROLLER SW-II	翻转窗滚轮SW-II	2	1-13
14	ACB0000344.1	WINDOW FRAME WELDING	窗框焊合	1	1-14
15	ACB0000366.2	FLIP THE WINDOW LOCK	翻转窗锁扣	2	1-15
16	ACB0000362.1	FRONT WIND WINDWO POSITIONING LOCK ATL-CFG35-040202	前风窗定位锁ATL-CFG35-040202	1	1-16
17	701104006023	BOLT	螺栓M6X12-8.8-DKL GB/T 5783	4	1-17
18	ACB0000355.1	FLIP THE WINDOW GLASS SW-II	翻转窗玻璃SW-II	1	1-18

雨刮器总成(ACB0000422)

WIPER ASSEMBLY

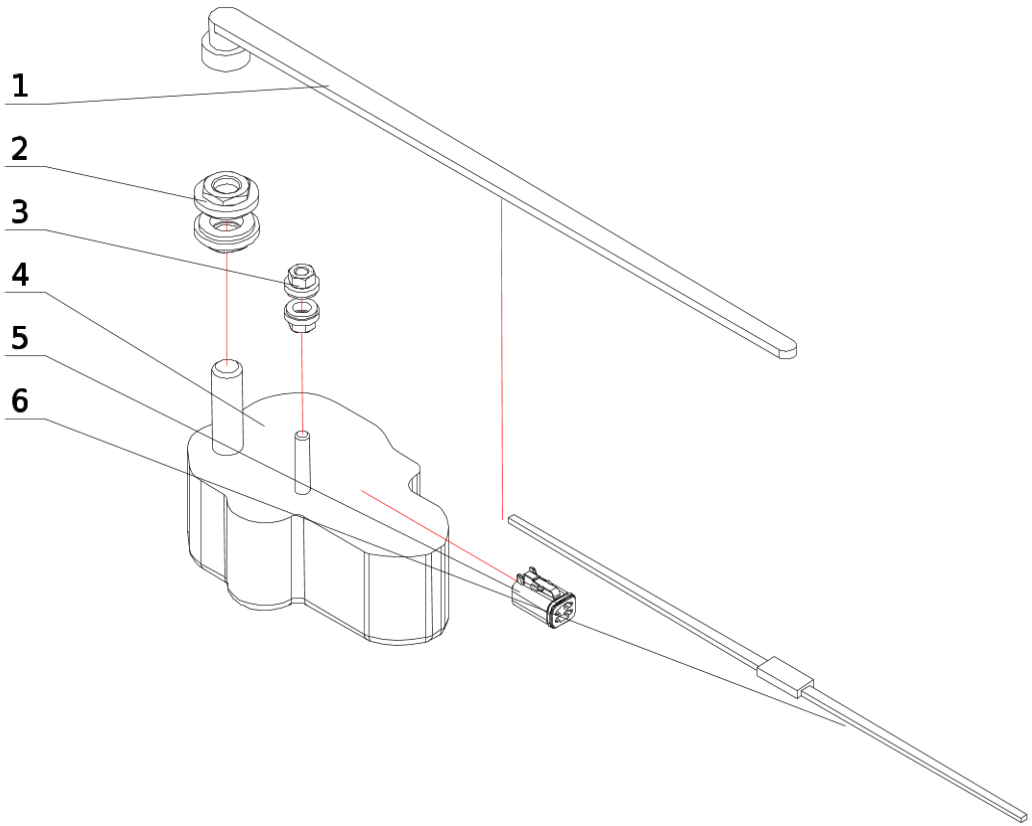

序号 POS	编码 CODE	DESCRIPTION	名称	数量 QTY	备注 remark
1	720405000076	WINDSCREEN WIPER	雨刮器	1	1-1
2	720405000077	ASSEMBLY PACKAGE	装配包100-5041-09-00	1	1-2
3	720405000078	ASSEMBLY PACKAGE	装配包100-5368-09-00	1	1-3
4	720405000075	WIPER MOTOR	雨刮电机315-0521-20-D0-C	1	1-4
5	720405000079	PLUG-IN	插接件100-5009-17-00	1	1-5
6	720405000069	WINDSCREEN WIPER	雨刮器	1	1-6

门总成(ACB0000388)

DOOR ASSEMBLY

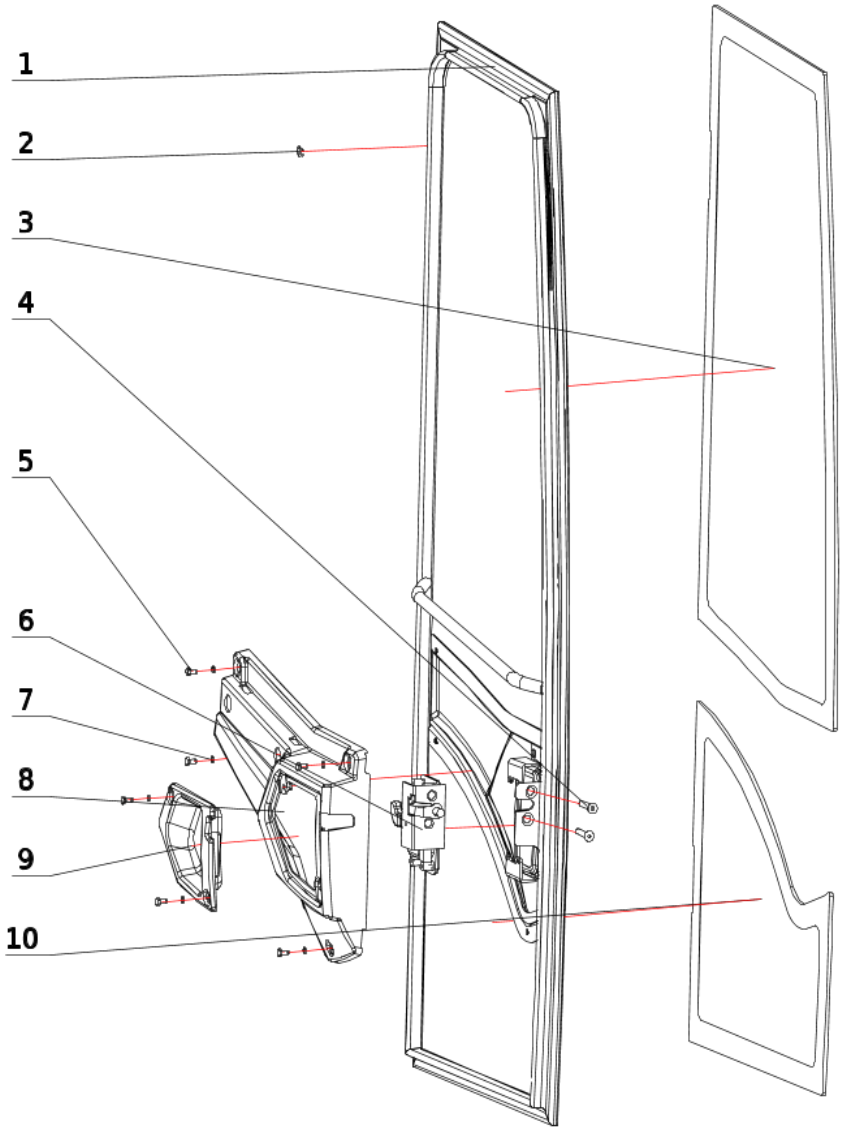

序号 POS	编码 CODE	DESCRIPTION	名称	数量 QTY	备注 remark
1	ACB0000389.1	DOOR WELDING	门焊合	1	1-1
2	750001000067	DOOR SEALANT STRIP	门密封胶条SW-II	1	1-2
3	ACB0000406.1	GLASS ON THE DOOR	门上玻璃SW-II	1	1-3
4	701324008003	SCREW	螺钉M8X45-8.8-DKL GBT 70.3	2	1-4
5	701104006023	BOLT	螺栓M6X12-8.8-DKL GB/T 5783	6	1-5
6	750713010062	DOOR LOCK ASSEMBLY	门锁总成SW-X	1	1-6
7	701510006003	WASHER	垫圈6-DKL GB/T 93	6	1-7
8	750719000296	DOOR INNER PANEL	CFG35UF门内护板	1	1-8
9	750719000298	DOOR LOCK COVER	CFG35UF门锁盖板	1	1-9
10	ACB0000407.1	GLASS UNDER THE DOOR	门下玻璃SW-II	1	1-10

标识总成-CFG35UF-null(ACE0001656)

Sign Assembly-CFG35UF

序号 POS	编码 CODE	DESCRIPTION	名称	数量 QTY	备注 remark
10	ACE0001663.1	English Decal assemblyCFG35UF-Closed cab	英文标识总成CFG35UF-封闭式-null	1	

英文标识总成CFG35UF-封闭式-null(ACE0001663)

English Decal assemblyCFG35UF-Closed cab

序号 POS	编码 CODE	DESCRIPTION	名称	数量 QTY	备注 remark
10	ACE0000721.1	挖机英文通用铭牌CFG（小款）	挖机英文通用铭牌CFG（小款）	1	
20	ACE0000716.1	车贴CFG35UF	车贴CFG35UF	1	
30	ACE0001665.1	English warning sign CFG35UF-KUBOTA	警示标识英文CFG35UF-久保田配置	1	
40	334020002632.2	DRIVER'S CAB LOGO	司机室LOGO	1	

上车总成-null(ACE0000538)

BOARDING ASSEMBLY

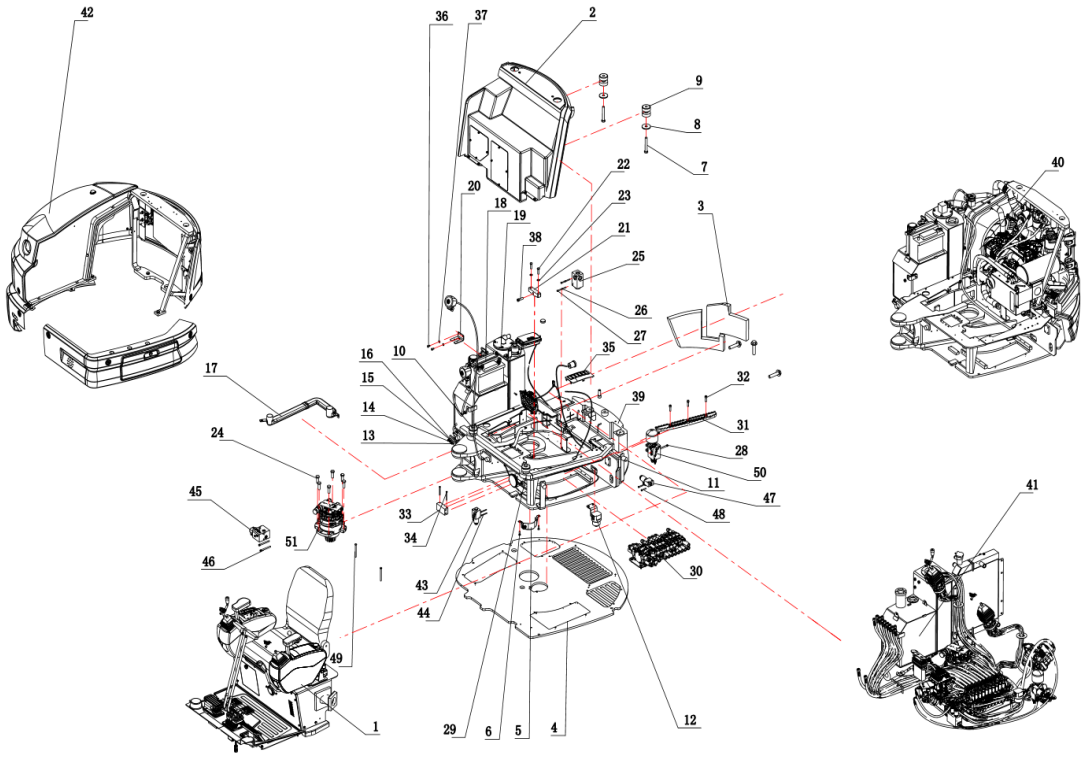

序号 POS	编码 CODE	DESCRIPTION	名称	数量 QTY	备注 remark
1	ACE0000355.2	DRIVER BENCH INSTALLATION	司机工作台安装-null	1	1--1
2	ACE0000553.2	INSTALLATION FO INTERMEDIATE SEALS	中间密封件安装-null	1	1-2
3	ACE0000574.2	COUNTERWEIGHT INSTALLATION	配重安装	1	1-3
4	ACE0000580.1	INSTALLATION OF BOTTOM SEALING PLATE	底封板安装	1	1--4
5	ACE0000586.1	OIL BOX	油盒	1	1-5
6	701104008028	BOLT	螺栓8X25-8.8-DKL GB/T 5783	2	1-6
7	701103016069	BOLT	螺栓16.0X110.0-10.9-DKL GB/T 5782	2	1-7
8	ACE0000591.2	MOUNTING PAD	司机室安装垫片	4	1-8
9	750201014945	SHOCK ABSORBER IN DRIVER'S CAB	减震器EH6463-50	4	1-9
10	701103016067	BOLT	螺栓16.0X100.0-10.9-DKL GB/T 5782	2	1-10
11	ACE0000592.1	BRACKET ASSEMBLY	围边安装支架组件	1	1-11
12	ACE0000600.1	PILOT FILTER INSTALLATION	先导过滤器安装	1	1-12
13	703101010001	OIL CUP	油杯M10X1(钢制) JB/T 7940.1进口	3	1-13
14	ACE0000605.2	FILLING TUBING ASSEMBLY	黄油室注油管总成	1	1-14
15	ACE0000606.3	FILLING TUBING ASSEMBLY	回转支承注油管总成	1	1-15
16	ACE0000602.3	BUTTER FILLING LINE	黄油注油管	1	1-16
17	750708000036	WARM AIR DUCT	暖风风道	1	1-17
18	ACE0000706.3	BATTERY INSTALLATION	电瓶安装	1	1-18
19	ACE0000294.3	TANK ASSEMBLY	油箱总成	1	1-19
20	ACE0000607.2	BATTERY SWITCH SUPPORT	电瓶开关支架	1	1-20
21	ACE0000608.2	MIDDLE STOP PLATE	中回止动板	1	1-21
22	701104010038	BOLT	螺栓M10X40-10.9-DKL GB/T 5783	2	1-22
23	701504010004	WASHER	垫圈10-DKL GBT 97.1	2	1-23
24	701104016030	BOLT	螺栓M16X45-10.9-DKL GB/T 5783	6	1-24
25	730399000738	RETURN THE OIL BLOCK	复合回油块8D9125000017	1	1-25
26	701510006003	WASHER	垫圈6-DKL GB/T 93	10	1--26
27	701302006027	SCREW	螺钉M6X80-8.8-ZnD GBT 70.1	2	1-27
28	701302008030	SCREW	螺钉M8X70-8.8-DKL GBT 70.1	2	1-28
29	ACE0000610.3	PLATFORM SPONGE ASSEMBLY	平台海绵总成-null	1	1-29
30	ACE0000619.2	MIULTIWAY VALVE INSTALLATION	多路阀部装-null	1	1--30
31	ACE0000622.1	PEDAL	踏板	1	1--31
32	701302010056	SCREW	螺钉M10X35-10.9-DKL GBT 70.1	3	1-32

上车总成-null(ACE0000538)

BOARDING ASSEMBLY

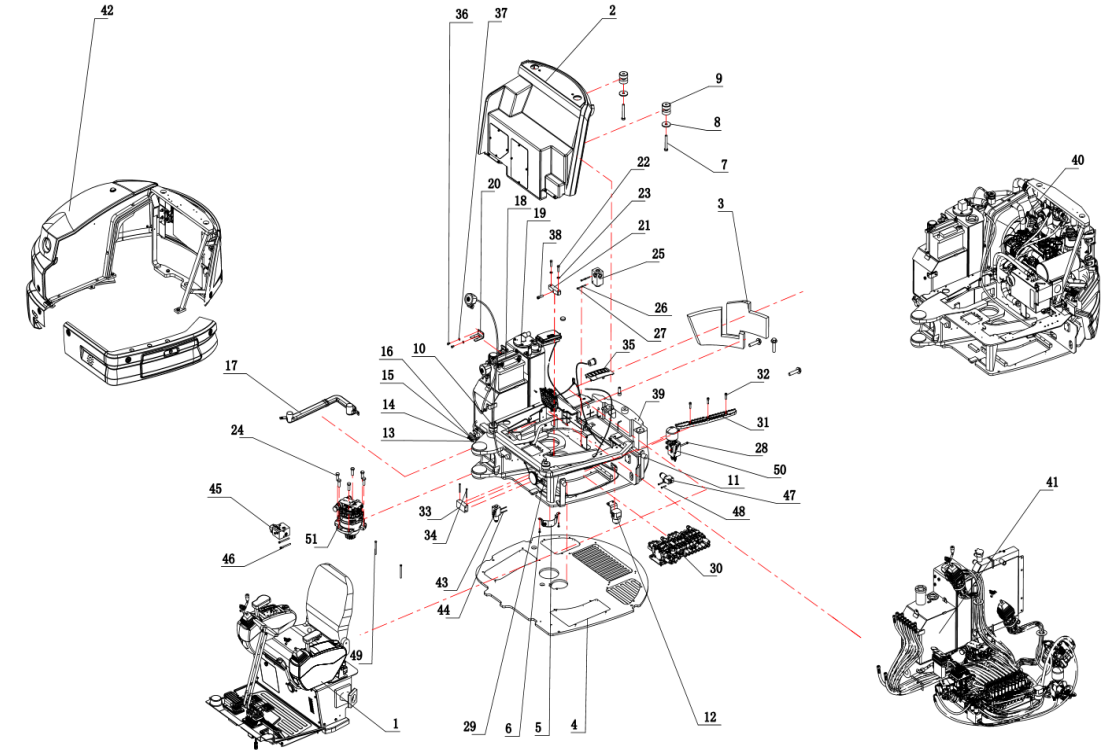

序号 POS	编码 CODE	DESCRIPTION	名称	数量 QTY	备注
33	ACE0000167.1	COLLECTING BLOCK	集流块	1	1-33
34	701103006024	BOLT	螺栓M6X65-8.8-DKL GB/T 5782	2	1-34
35	ACE0000137.5	Onboard electrical system	上车电气系统-null	1	1-35
36	701104081601	BOLT	螺栓M8X16-10.9-DKL GBT 5783	2	1-36
37	701504008005	WASHER	垫圈8.0200 HV-DKL GBT 97.1	7	1-37
38	701307124001	SCREW	螺钉M12X40-12.9 GB/T 77	1	1-38
39	ACE0000998.2	RESPONING PLATFORM	回转平台（久保田）	1	1-39
40	ACE0000793.1	POWER SYSTEM ASSEMBLY	动力系统总成（久保田）-null	1	1--40
41	ACE0000787.1	HYDRAULIC SYSTEM	上车液压系统（恒立—国际）	1	1-41
42	ACE0001295.2	COVER PARTS ASSEMBLY	CFG35UF覆盖件总成（久保田）-null	1	1--42
43	730306000099	SELECT THE VALVE	选择阀KL7102106ER13EG	1	1-43
44	701302005031	SCREW	螺钉M5X50-12.9-DKL GBT 70.1	2	1--44
45	730399001126	MERITORIOUS	液压快换锁控制阀KHS-11-300	1	1--45
46	701302008038	SCREW	螺钉M8X90-8.8-DKL GBT 70.1	2	1-46
47	730399000964	SOLENOID VALVE	常闭电磁阀KDCFK-19/315	1	1-47
48	701104006022	BOLT	螺栓M6X40-8.8-DKL GB/T 5783	2	1--48
49	701103008036	BOLT	螺栓8.0X100.0-8.8-DKL GB/T 5782	2	1-49
50	730399001007	PILOT OIL SOURCE BLOCK	先导油源块811300218	1	1-50
51	730250001039	SWING MOTOR	回转马达HM5X15001670-2B-SHA	1	1--51

CFG35UF覆盖件总成（久保田）-null(ACE0001295)

COVER PARTS ASSEMBLY

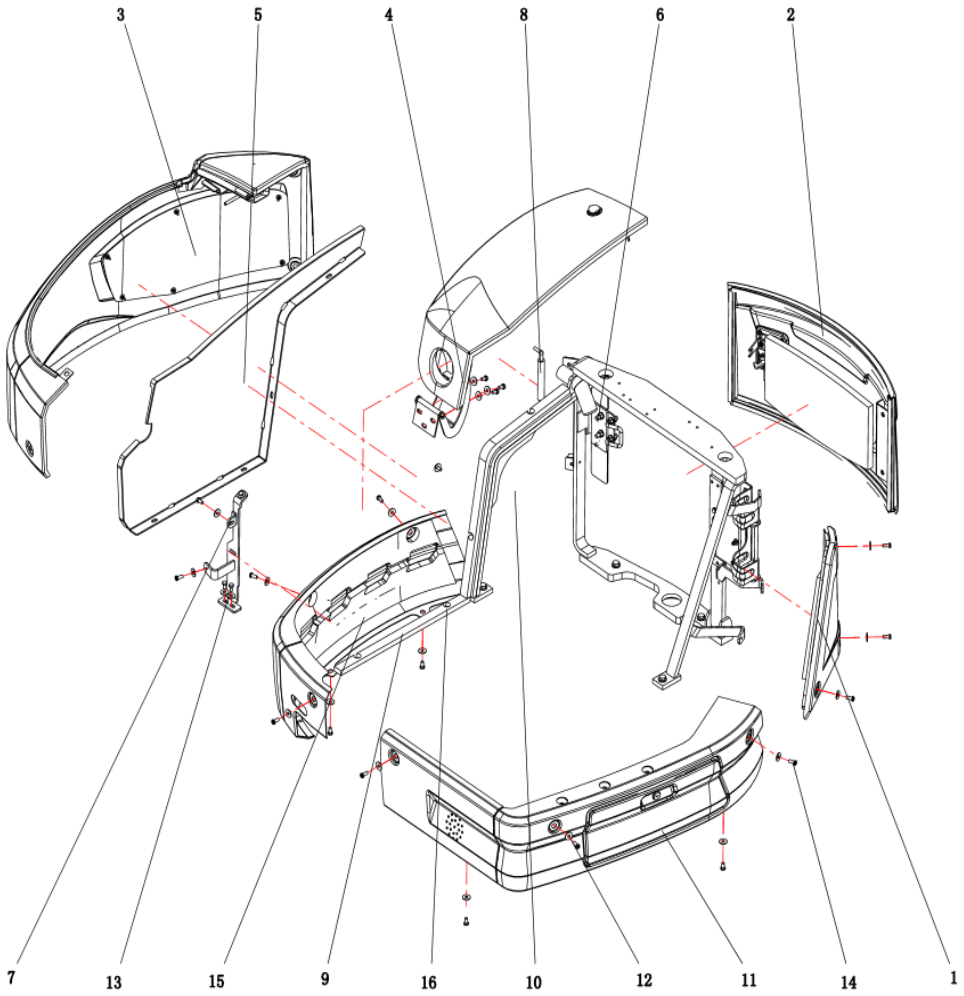

序号 POS	编码 CODE	DESCRIPTION	名称	数量 QTY	备注 remark
1	ACE0000434.1	LEFT COVER ASSEMBLY	新CFG35UF左覆盖件总成	1	1-1
2	ACE0000441.2	REAR COVER ASSEMBLY	新CFG35UF覆盖件后盖总成	1	1-2
3	ACE0000470.3	COVER ASSEMBLY	新CFG35UF右覆盖件总成	1	1-3
4	ACE0000485.5	ASSEMBLY	新CFG35UF覆盖件右上盖总成	1	1-4
5	ACE0000548.1	DUMMY PLATE	新CFG35UF隔板	1	1-5
6	ACE0001300.1	FRAME ASSEMBLY	CFG35UF骨架总成（久保田）	1	1-6
7	ACE0000539.2	INSTALL THE BRACKET	新CFG35UF右覆盖件前安装支架组件	1	1-7
8	750701000316	GAS SPRING	气弹簧QH310-120-50	1	1--8
9	ACE0000551.2	SPONGE	新CFG35UF驾驶室右密封海棉2	1	1--9
10	ACE0000549.2	SPONGE	新CFG35UF驾驶室右密封海棉1	1	1-10
11	ACE0000505.1	LEFT COVERING ASSEMBLY	新CFG35UF覆盖件左围边总成	1	1-11
12	701506008002	WASHER	垫圈8-DKL GBT 96.1	26	1-12
13	701104008026	BOLT	螺栓	18	1-13
14	701323082002	SCREW	螺钉M8X20-8.8-DKL GBT 70.2	12	1-14
15	ACE0000543.1	RIGHT COVER ASSEMBLY	新CFG35UF覆盖件右围边总成	1	1-15
16	701504008005	WASHER	垫圈8.0200 HV-DKL GBT 97.1	4	1-16

新CFG35UF覆盖件右围边总成(ACE0000543)

RIGHT COVER ASSEMBLY

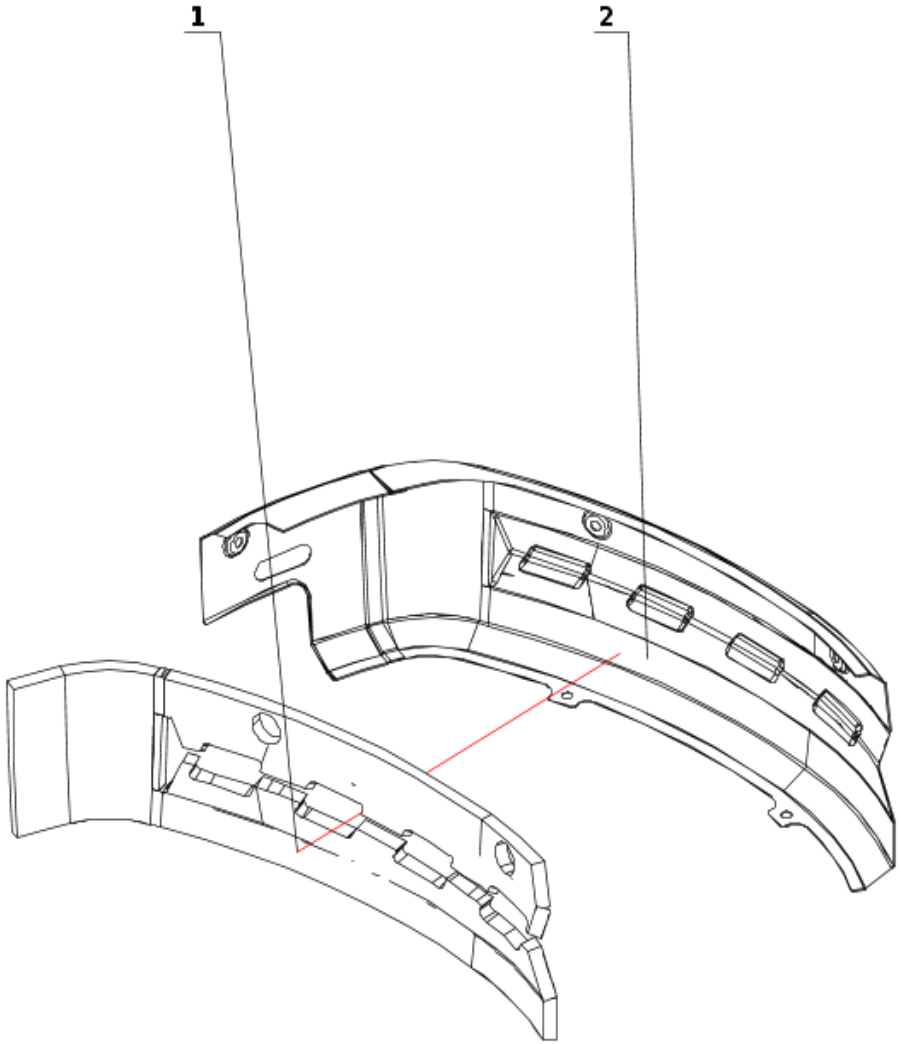

序号 POS	编码 CODE	DESCRIPTION	名称	数量 QTY	备注 remark
1	ACE0000547.2	SPONGE	新CFG35UF覆盖件右围边海绵	1	1-1
2	ACE0000544.1	RIGHT EDGE WELDMENT ASSEMBLY	新CFG35UF覆盖件右围边组焊件	1	1-2

新CFG35UF覆盖件左围边总成(ACE0000505)

LEFT COVERING ASSEMBLY

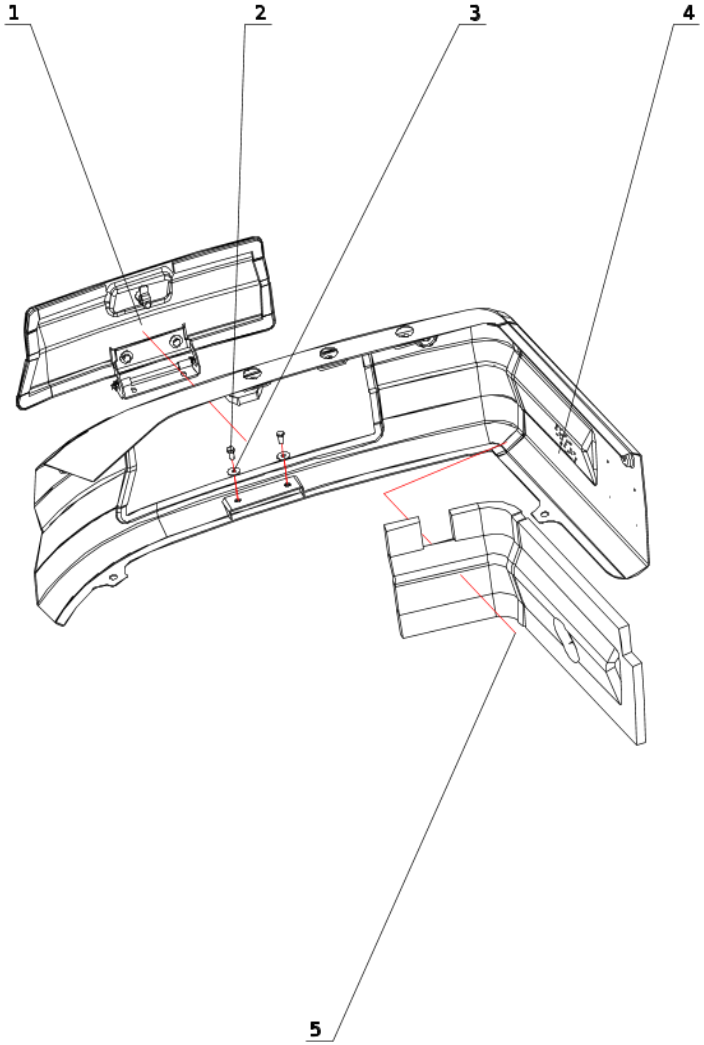

序号 POS	编码 CODE	DESCRIPTION	名称	数量 QTY	备注 remark
1	ACE0000515.1	DOOR SUBASSEMBLY	新CFG35UF覆盖件左围边小门组件	1	1-1
2	701104008002	BOLT M8X16-8.8-ZND GB/T 5783	螺栓M8X16-8.8-ZnD GB/T 5783	2	1-2
3	701506008002	WASHER	垫圈8-DKL GBT 96.1	2	1-3
4	ACE0000506.1	LEFT COVERING SUBASSEMBLY	新CFG35UF覆盖件左围边组件	1	1-4
5	ACE0000513.1	SPONGE	新CFG35UF左围边海棉	1	1-5

新CFG35UF左覆盖件总成(ACE0000434)

LEFT COVER ASSEMBLY

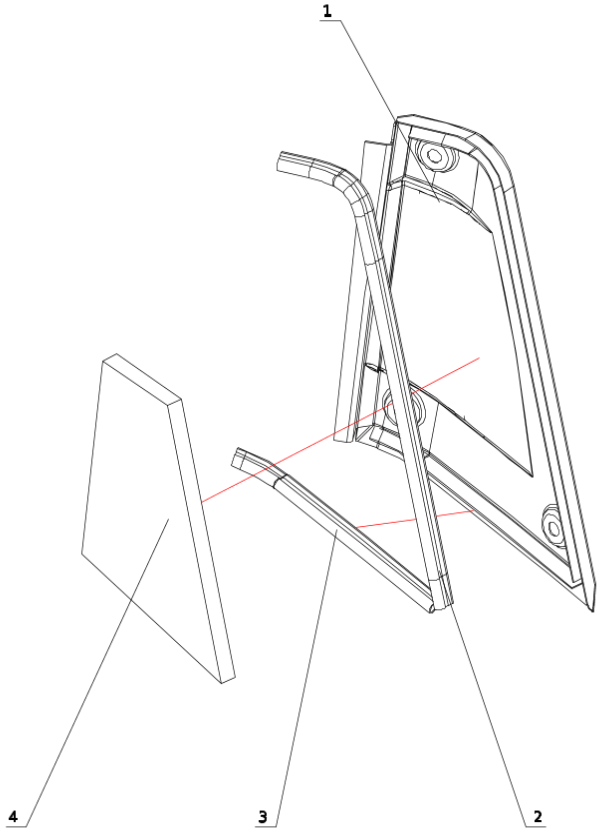

序号 POS	编码 CODE	DESCRIPTION	名称	数量 QTY	备注 remark
1	ACE0000435.1	LEFT COVER WELDMENT ASSEMBLY	新CFG35UF左覆盖件组焊件	1	1-1
2	750030000134	SEAL RUBBER	机罩密封胶条	2	1-2,1-3
2	750030000134	SEAL RUBBER	机罩密封胶条	2	1-2,1-3
4	ACE0000440.2	SPONGE	新CFG35UF左覆盖件海棉	1	1-4

新CFG35UF覆盖件右上盖总成(ACE0000485)

ASSEMBLY

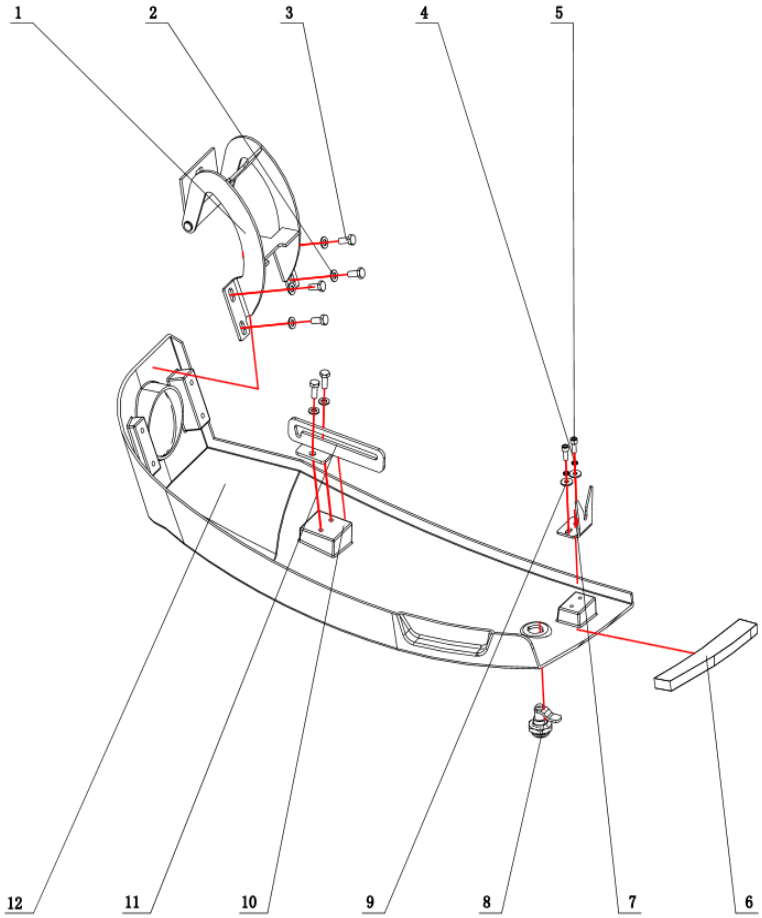

序号 POS	编码 CODE	DESCRIPTION	名称	数量 QTY	备注 remark
1	ACE0000486.3	HINGE ASSEMBLY	新CFG35UF覆盖件右上盖铰链总成	1	1-1
2	701504008005	WASHER	垫圈8.0200 HV-DKL GBT 97.1	6	1-2
3	701104008027	BOLT	螺栓M8X20-10.9-DKL GB/T 5783	6	1-3
4	701510006003	WASHER	垫圈6-DKL GB/T 93	2	1-4
5	701302006038	SCREW	螺钉M6X16-8.8-DKL GBT 70.1	2	1-5
6	ACE0000501.1	SHOCK PAD	新CFG35UF覆盖件右上盖吸震垫	1	1-6
7	ACE0000500.1	GUIDE PLATE	新CFG35UF覆盖件右上盖导向板	1	1-7
8	751501001590	CIRCULAR LOCK	圆锁WY-HXS(D)-ht（新防水盖）	1	1-8
9	701506006001	WASHER	垫圈6-ZnD GBT 96.1	2	1-9
10	ACE0000499.1	UPPER RIGHT COVER PLATE	新CFG35UF右上盖	1	1-10
11	ACE0001841.1	support	右上盖气弹簧支架	1	1-11
12	ACE0001800.1	SPONGE	25UF右上盖海绵	1	1-12

CFG35UF骨架总成（久保田）(ACE0001300)

FRAME ASSEMBLY

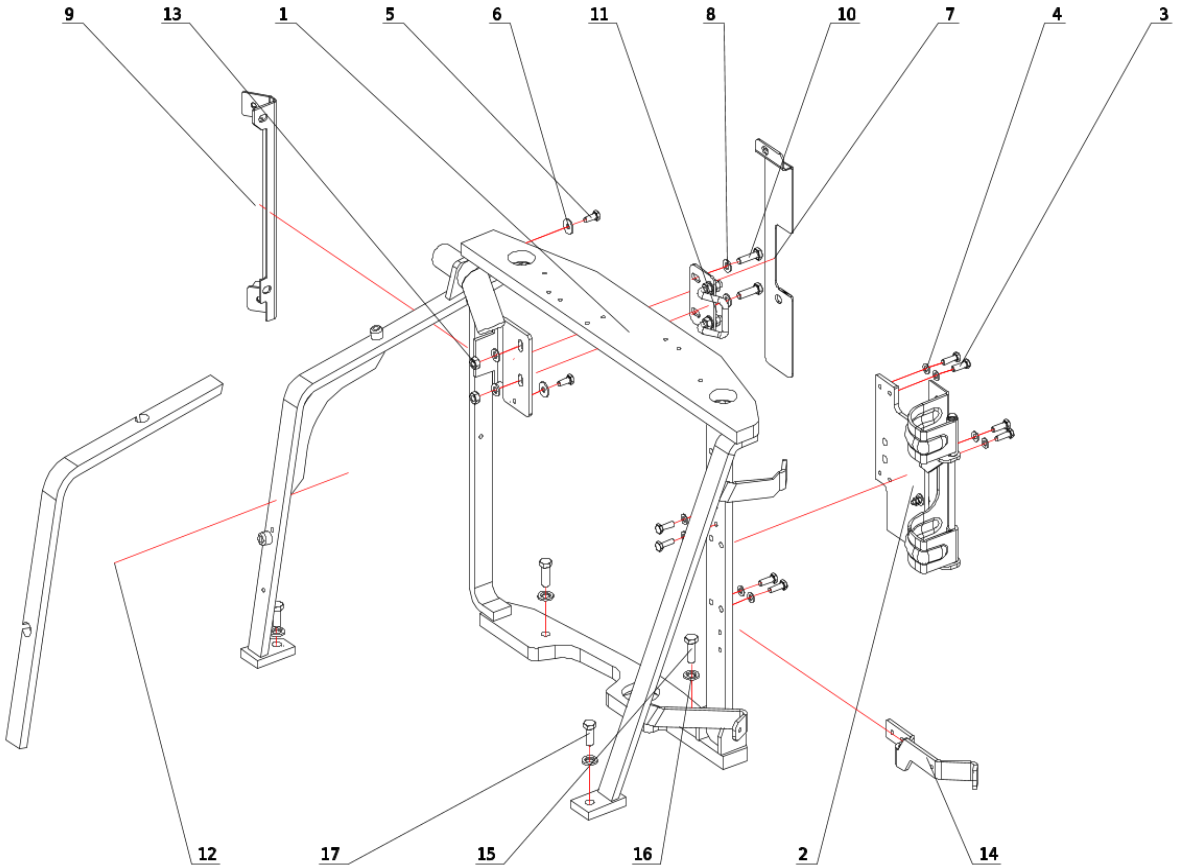

序号 POS	编码 CODE	DESCRIPTION	名称	数量 QTY	备注 remark
1	ACE0001302.1	FRAME	CFG35UF骨架组件（久保田）	1	1-1
2	ACE0001304.1	HINGE ASSEMBLY	CFG35UF后盖铰链总成（久保田）	1	1-2
3	701104008028	BOLT	螺栓8X25-8.8-DKL GB/T 5783	8	1-3
4	701504008005	WASHER	垫圈8.0200 HV-DKL GBT 97.1	8	1-4
5	701104008027	BOLT	螺栓M8X20-10.9-DKL GB/T 5783	2	1-5
6	701506008002	WASHER	垫圈8-DKL GBT 96.1	2	1-6
7	ACE0001307.1	DUMMY PLATE	CFG35UF后盖右侧密封板(久保田)	1	1-7
8	701504010004	WASHER	垫圈10-DKL GBT 97.1	4	1-8
9	ACE0001308.1	FRAME	CFG35UF右覆盖件安装支架组件(久保田)	1	1-9
10	701104010037	BOLT	螺栓M10X35-10.9-DKL GB/T 5783	2	1-10
11	ACE0000431.1	LOCK SUBASSEMBLY	新CFG35UF后盖锁扣组件	1	1-11
12	ACE0000426.2	SPONGE	新CFG35UF骨架右前撑板海棉	1	1-12
13	701406010006	NUT	螺母M10-10-DKL GB/T 6170	2	1-13
14	ACE0000425.1	SUPPORT	新CFG35UF骨架左覆盖件右安装支架	1	1-14
15	701104012023	BOLT	螺栓	2	1-15
16	701508012002	WASHER	垫圈	4	1-16
17	701104012025	BOLT	螺栓M12X30-10.9-DKL GB-T 5783	2	1-17

新CFG35UF覆盖件后盖总成(ACE0000441)

REAR COVER ASSEMBLY

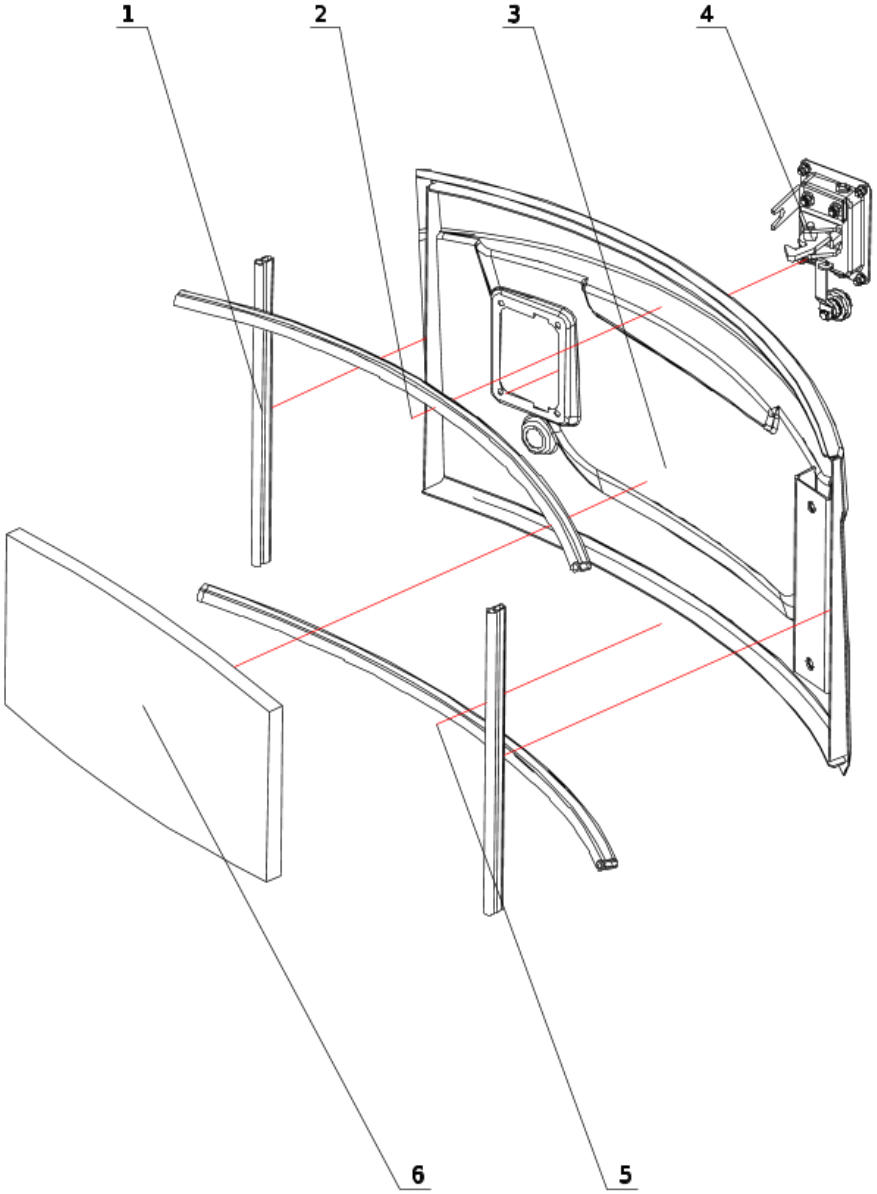

序号 POS	编码 CODE	DESCRIPTION	名称	数量 QTY	备注 remark
1	750030000227	SEAL RUBBER	钢芯复合密封条 顶泡Φ10	4	1--1
2	ACE0001797.2	SPONGE	25UF后盖上海绵	1	1--2
3	ACE0000442.2	REAR COVER WELDMENT ASSEMBLY	新CFG35UF覆盖件后盖组焊件	1	1-3
4	ACE0000449.1	LOCK ASSEMBLY	新CFG35UF覆盖件后盖锁总成	1	1-4
5	ACE0001798.2	SPONGE	25UF后盖下海绵	1	1--5
6	ACE0000452.3	SPONGE	新CFG35UF覆盖件后盖海棉	1	1--6

新CFG35UF右覆盖件总成(ACE0000470)

COVER ASSEMBLY

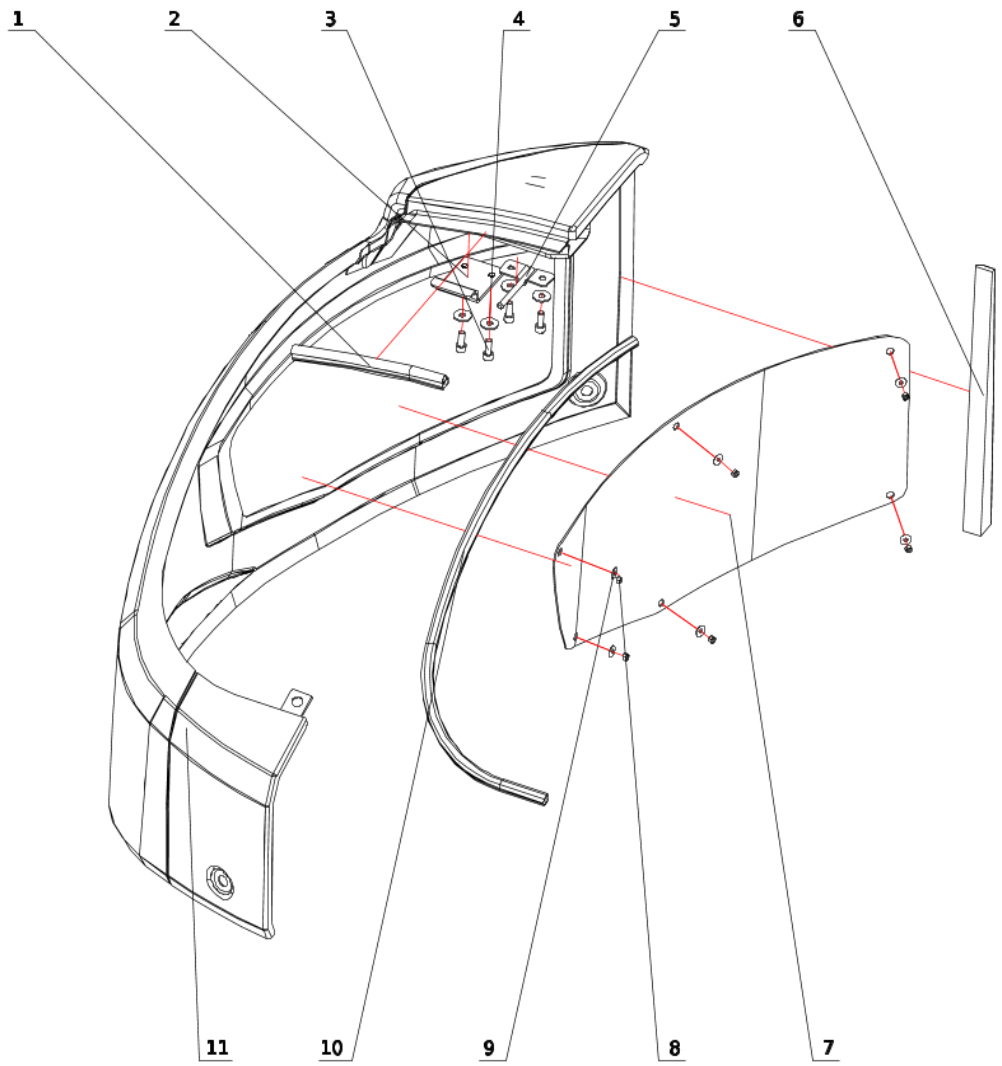

序号 POS	编码 CODE	DESCRIPTION	名称	数量 QTY	备注 remark
1	750001000016	SEAL RUBBER	固定胶条（新F704型）	1	1--1
2	ACE0000480.2	LATCH PLATE	新CFG35UF右上盖锁扣板	1	1-2
3	701302008025	SCREW	螺钉M8X20-8.8-DKL GBT 70.1	4	1-3
4	701506008002	WASHER	垫圈8-DKL GBT 96.1	4	1-4
5	ACE0000481.1	GUIDE BUCKLE SUBASSEMBLY	新CFG35UF右上盖导向扣组件	1	1-5
6	ACE0000484.2	SPONGE	新CFG35UF左覆盖件海棉	1	1-6
7	ACE0000479.2	HALFTONE	新CFG35UF右覆盖件网板	1	1-7
8	701406005002	NUT	螺母M5-8-ZnD GB/T 6170	6	1-8
9	701506050001	WASHER	垫圈5-ZnD GBT 96.1	6	1-9
10	750001000016	RUBBER STRIP, FIXED	固定胶条（新F704型）	2	1-10,1-1
11	ACE0000471.2	COVER WELDMENT ASSEMBLY	新CFG35UF右覆盖件焊接	1	1-11

黄油注油管(ACE0000602)

BUTTER FILLING LINE

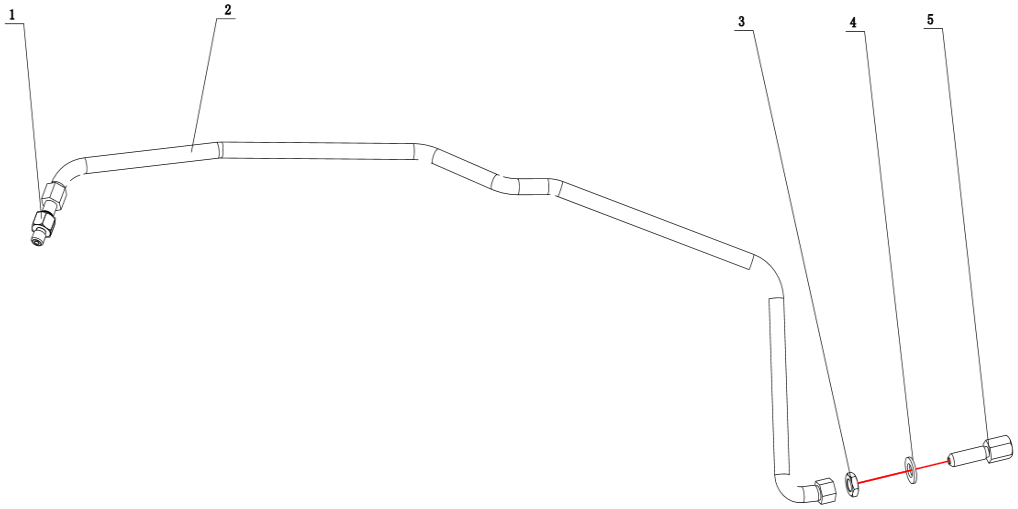

序号 POS	编码 CODE	DESCRIPTION	名称	数量 QTY	备注 remark
1	ACE0000604.1	FITTINGS BODY	接头体	1	1-1
2	BHP0001394	BUTTER HOSE ASSY	黄油胶管总成	1	1--2
3	701410010002	NUT M10X1-04-DKL GB/T 6173	螺母M10X1-04-DKL GBT 6173	1	1-3
4	701504010001	WASHER	垫圈10-ZnD GBT 97.1	1	1-4
5	ACE0000603.1	FITTINGS BODY	接头体	1	1-5

回转支承注油管总成(ACE0000606)

FILLING TUBING ASSEMBLY

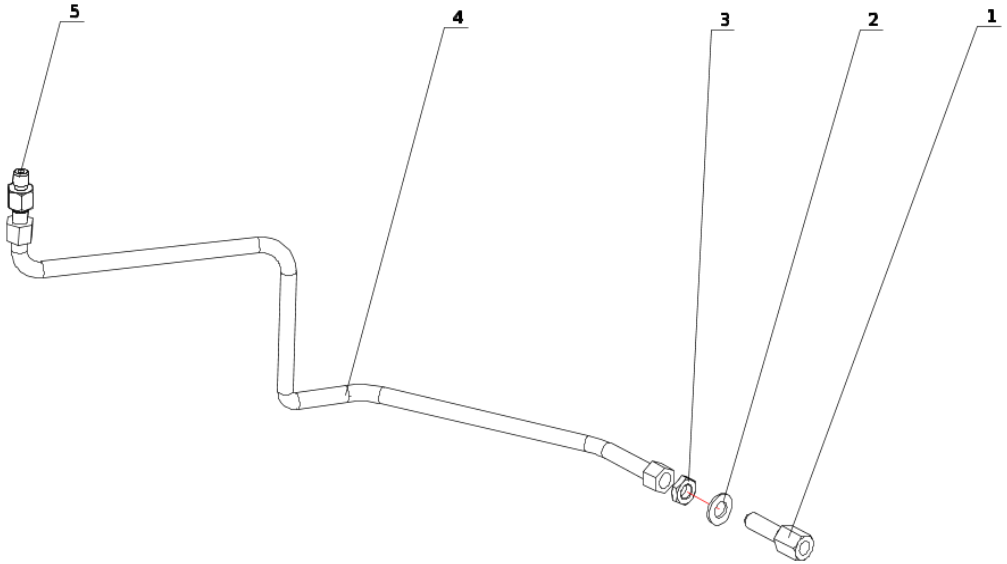

序号 POS	编码 CODE	DESCRIPTION	名称	数量 QTY	备注 remark
1	ACE0000603.1	FITTINGS BODY	接头体	1	1-1
2	701504010001	WASHER	垫圈10-ZnD GBT 97.1	1	1-2
3	701410010002	NUT M10X1-04-DKL GB/T 6173	螺母M10X1-04-DKL GBT 6173	1	1-3
4	BHP0001393	BUTTER HOSE ASSY	黄油胶管总成	1	1--4
5	ACE0000604.1	FITTINGS BODY	接头体	1	1-5

黄油室注油管总成(ACE0000605)

FILLING TUBING ASSEMBLY

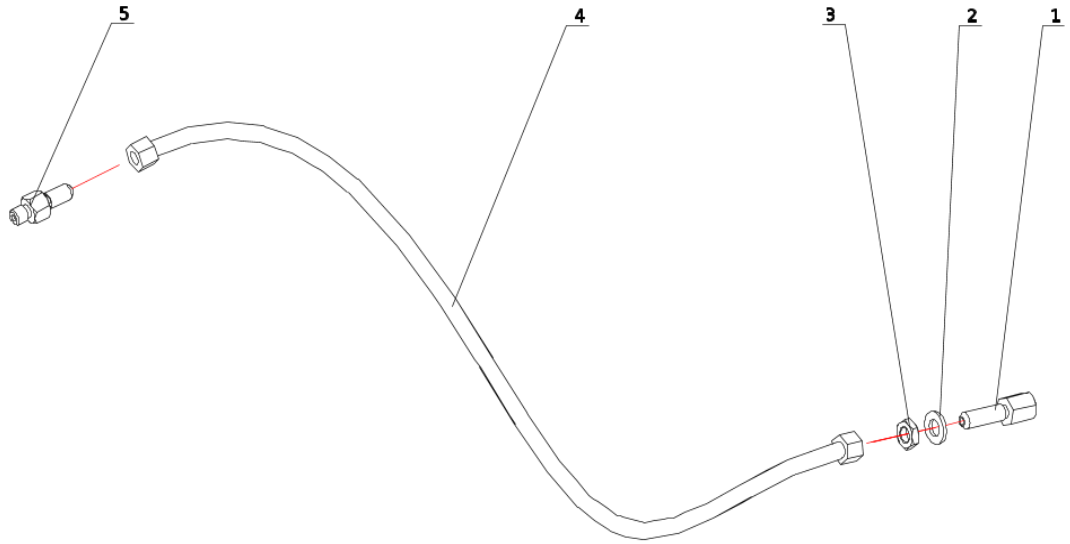

序号 POS	编码 CODE	DESCRIPTION	名称	数量 QTY	备注 remark
1	ACE0000603.1	FITTINGS BODY	接头体	1	1-1
2	701504010001	WASHER	垫圈10-ZnD GBT 97.1	1	1-2
3	701410010002	NUT M10X1-04-DKL GB/T 6173	螺母M10X1-04-DKL GBT 6173	1	1-3
4	730599000760	BUTTER HOSE ASSY	黄油胶管总成C/C2-4I-690	1	1-4
5	ACE0000604.1	FITTINGS BODY	接头体	1	1-5

动力系统总成（久保田）-null(ACE0000793)

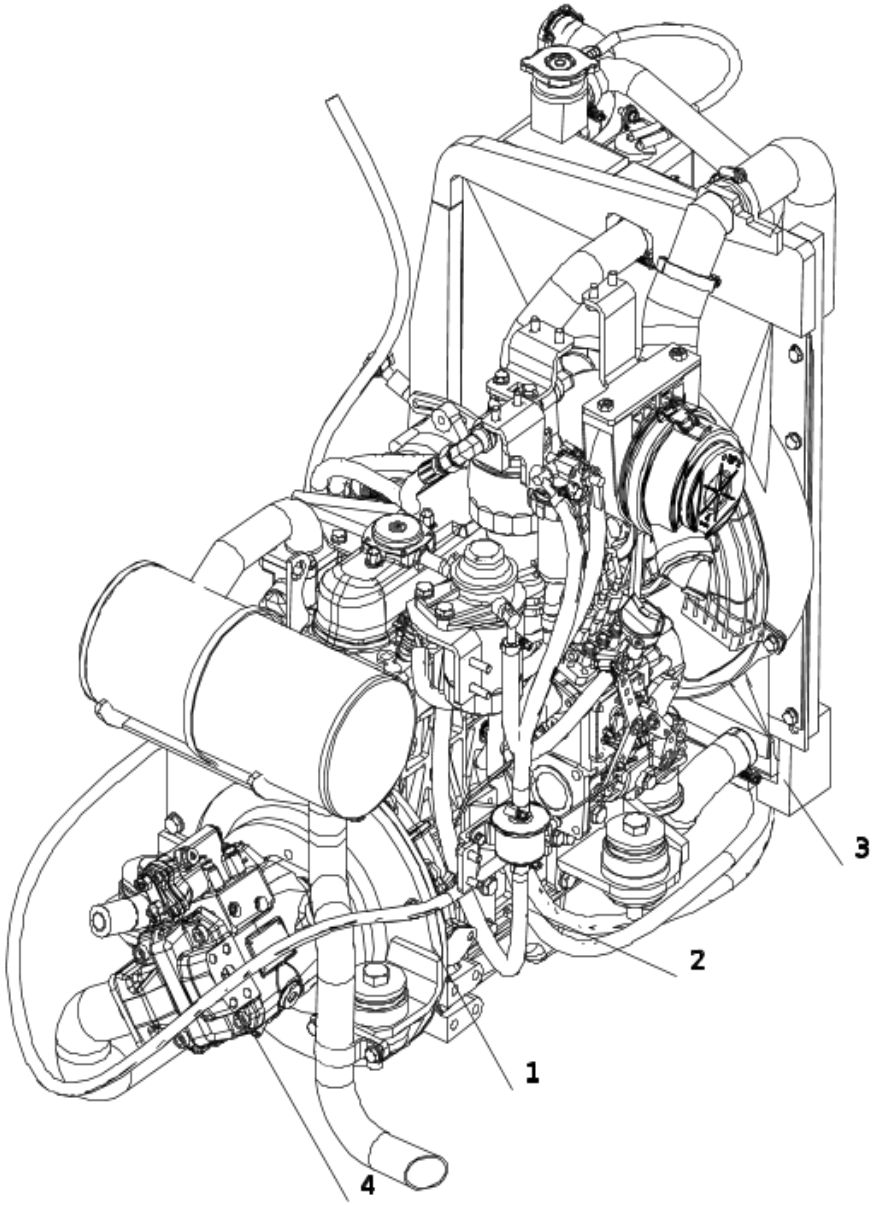

序号 POS	编码 CODE	DESCRIPTION	名称	数量 QTY	备注 remark
1	ACE0000794.2	ENGINE INSTALLATION	发动机安装-null	1	1-1
2	ACE0000855.2	FUEL SYSTEM INSTALLATION	燃油系统安装	1	1-2
3	ACE0000861.1	INSTALLATION OF THE COOLING SYSTEM	冷却系统安装-null	1	1-3
4	ACE0000882.2	INSTALLATION OF THE MAIN PUMP	主泵安装-null	1	1-4

主泵安装-null(ACE0000882)

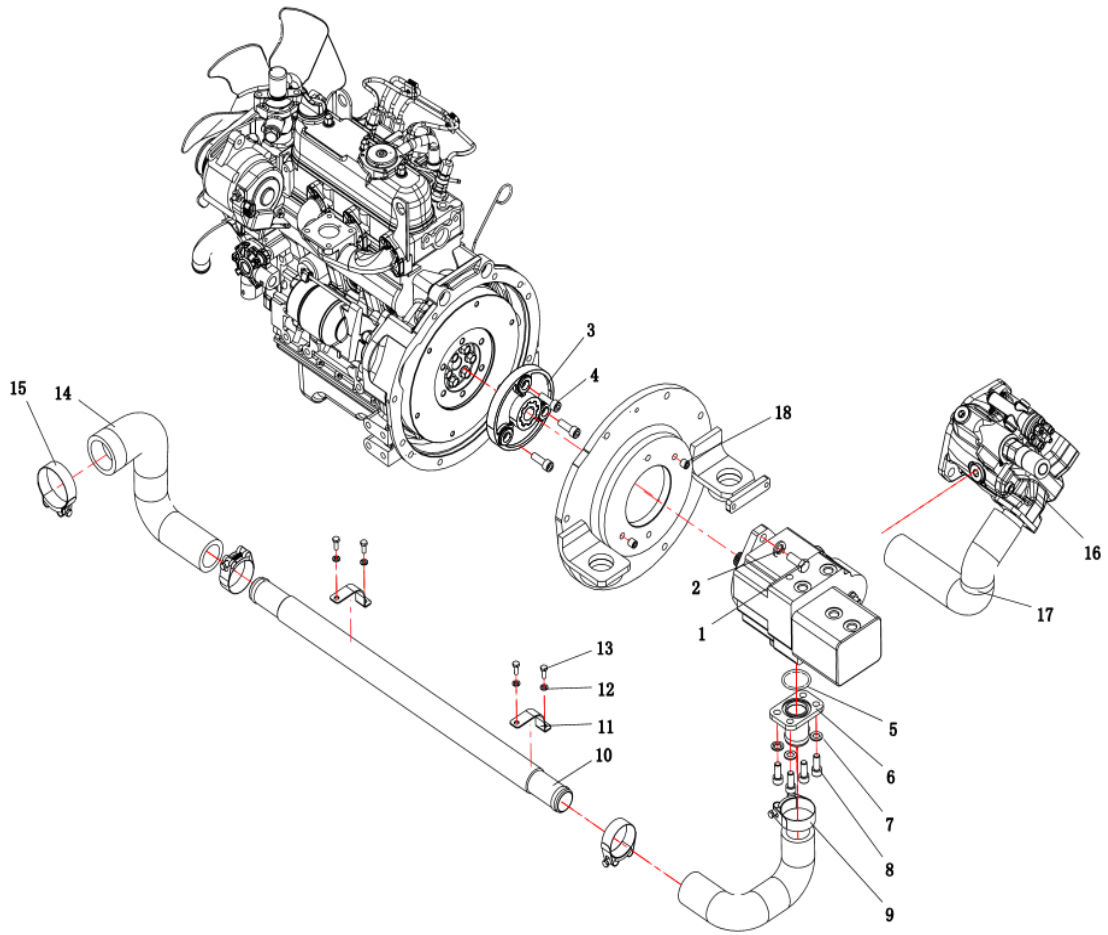

序号 POS	编码 CODE	DESCRIPTION	名称	数量 QTY	备注 remark
1	701104012025	BOLT	螺栓M12X30-10.9-DKL GB-T 5783	2	1-1
2	701508012002	WASHER	垫圈	2	1-2
3	750310000418	COUPLING	联轴器RJ-SHZN210223	1	1-3
4	751104000079	SCREW	内六角圆柱头螺钉M10X1.25X30-10.9-DKL	3	1-4
5	703201037502	O-RING	O形圈37.5X3.55-G-N GB-T 3452.1	1	1-5
6	ACE0000454.1	OIL SUCTION PIPE	主泵吸油钢管	1	1-6
7	701508010001	WASHER	垫圈10-DKL GBT 1230	4	1-7
8	701302010045	SCREW	螺钉M10X25-10.9-DKL GBT 70.1	4	1-8
9	751011000494	CLAMP	垫片卡箍φ38-φ60 16 SAE J1508	3	1-9
10	ACE0000460.2	OIL SUCTION STEAIGHT PIPE	吸油直钢管	1	1-10
11	ACE0000458.2	SUCTION TUBING CLAMPS	吸油钢管压板	2	1-11
12	701504006002	WASHER	垫圈6-DKL GBT 97.1	4	1-12
13	701104006017	BOLT	螺栓M6X16-8.8-DKL GB/T 5783	4	1-13
14	ACE0000459.1	OIL SUCTION HOSE	吸油胶管1	1	1-14
15	751011000495	CLAMP	垫片卡箍φ50-φ72 16 SAE J1508	1	1-15
16	730201000585	MAIN PUMP	主泵HP5VS28-AV10RB2S1MA-L1-1-T921	1	1-16
17	ACE0000881.1	OIL-ABSORBING HOSE	吸油胶管（配恒立主泵）	1	1-17
18	701307012004	SCREW	螺钉M12X12 GBT 77	2	1-18

发动机安装-null(ACE0000794)

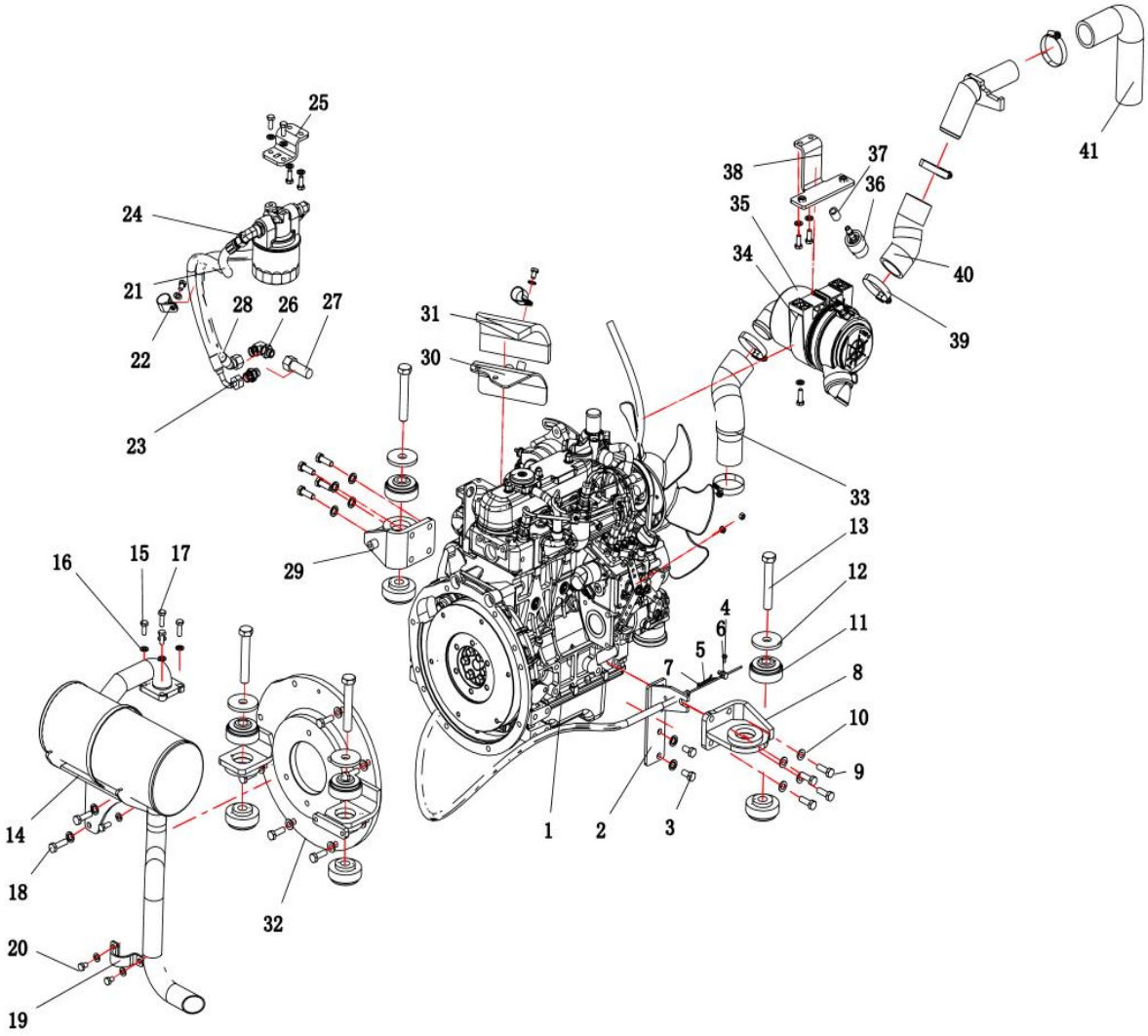

序号 POS	编码 CODE	DESCRIPTION	名称	数量 QTY	备注 remark
1	750201000728	ENGINE	柴油机	1	1-1
2	ACE0000795.1	BRACKET WELDING	油门拉线支架焊接	1	1-2
3	701106101001	BOLT	螺栓M10X1.25X20-8.8-DKL GBT 5786	2	1-3
4	701104005008	BOLT	螺栓M5X10-8.8-ZnD GB/T 5783	1	1-4
5	750202000085	THE THROTTER PULL	CFG17B-3油门拉线WJ108A	1	1-5
6	ACE0000182.1	MOUNTING	固定件	1	1-6
7	701703005001	SELLL	销5X36-ZnD GBT 91	1	1-7
8	ACE0000798.1	WELDING OF THE RIGHT REAR FOOT	右后支脚焊接	1	1-8
9	701106010003	BOLT	螺栓M10X1.25X30-10.9-DKL GB/T 5786	14	1-9
10	701508010001	WASHER	垫圈10-DKL GBT 1230	18	1-10
11	751501000757	SHOCK ABSORBER	减震器	8	1-11
12	ACE0000170.1	WASHER	安装垫圈	4	1-12
13	701103016067	BOLT	螺栓16.0X100.0-10.9-DKL GB/T 5782	4	1-13
14	750205000278	SILENCER	消声器	1	1-14
15	701104008031	BOLT	螺栓M8X20-8.8-DKL GB/T 5783	9	1-15
16	701504008005	WASHER	垫圈8.0200 HV-DKL GBT 97.1	17	1-16
17	701104008028	BOLT	螺栓8X25-8.8-DKL GB/T 5783	4	1-17
18	701106010007	BOLT	螺栓M10X1.25X35-10.9-DKL GBT 5786	2	1-18
19	ACE0000200.1	FIXED HOOP	尾管固定抱箍	1	1-19
20	701104008043	BOLT	螺栓M8X12-8.8-DKL GB/T 5783	4	1-20
21	730599001339	HOSE	胶管总成F221CACE121206-700-PG-600	1	1-21
22	729808000005	WIRE CLAMP	线夹	2	1-22
23	730101000155	MAL STUD FITTING	端直通接头GE12LMEDOMDA3C	1	1-23
24	730102000062	CONNECT	端直角可调向接头WEE12LR1-20MDA3C	2	1-24
25	ACE0000803.1	FILTER HOLDER	机滤支架	1	1-25
26	730102000541	CONNECT	端直角可调向接头WEE12LM16X1.5OROMDA3C	1	1-26
27	730199001476	OIL MALSTUD FITIING	机油进口接头M18X1.5	1	1-27
28	730599001338	HOSE	胶管总成F221CACF121206-700-PG-600	1	1-28
29	ACE0000834.1	BRACKET WELDING	右前支架焊接	1	1-29
30	ACE0000839.1	BRACKET WELDING	机油管路固定支架焊接	1	1-30
31	ACE0000842.2	SPONGE	机油管路支架隔热棉	1	1-31
32	ACE0000828.1	WELDING OF CONNECTING DISCS	连接盘焊接	1	1-32

发动机安装-null(ACE0000794)

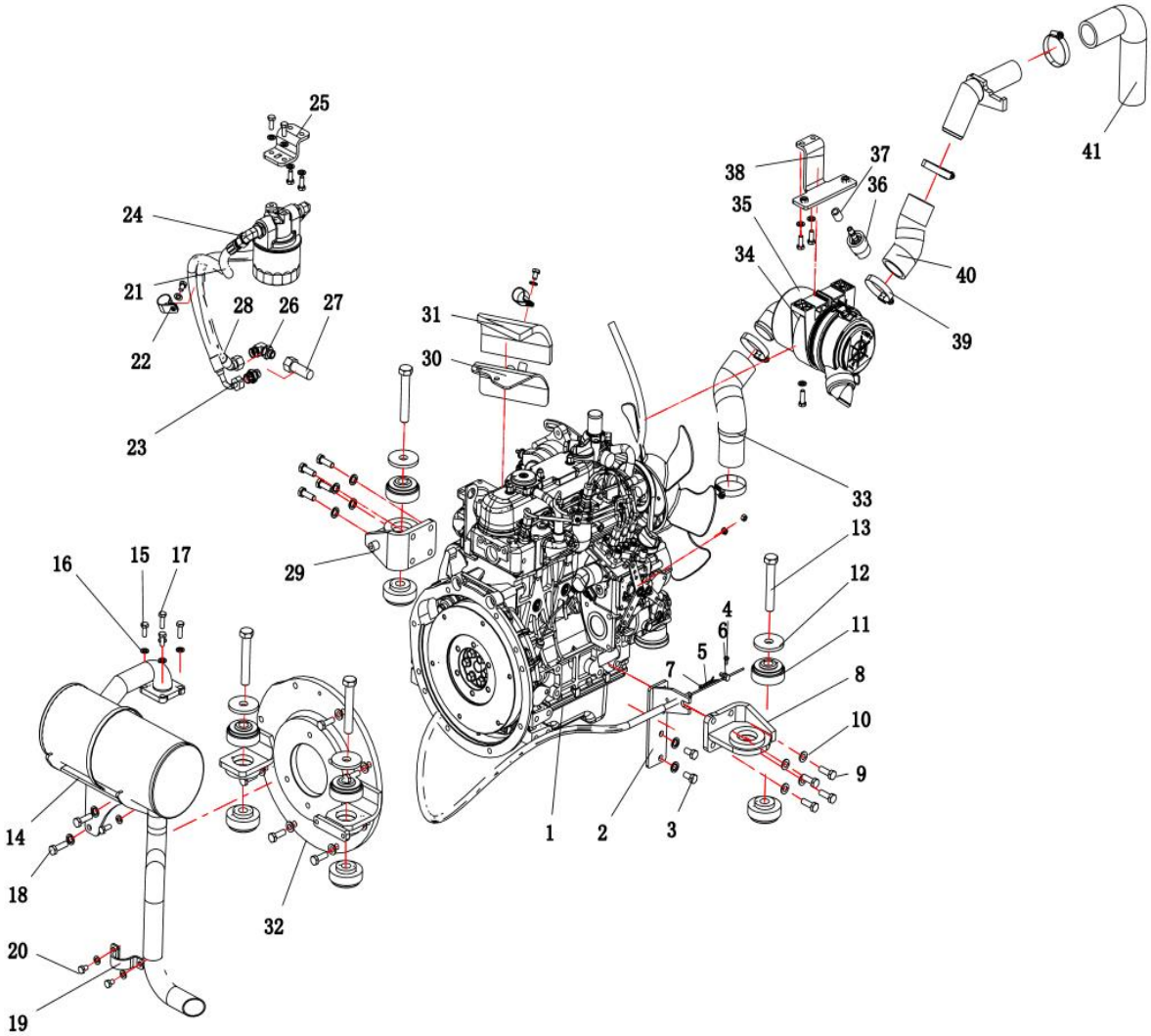

序号 POS	编码 CODE	DESCRIPTION	名称	数量 QTY	备注 remark
33	ACE0000804.1	ENGINE AIR INTAKE HOSE	发动机进气胶管	1	1-33
34	730402010065	AIR FILTER HOOP	空滤器抱箍P777151	1	1-34
35	730402000361	AIR CLEANER	空滤器G042734	1	1-35
36	750201011246	ALERTOR	报警器X770050(电子式)	1	1-36
37	750201011247	ALERTOR CONNECTOR	报警器连接接头P100089	1	1-37
38	ACE0000824.1	MOUNTING PLATE WELDING	空滤安装板焊接	1	1-38
39	751011000088	CLAMP	德式涡轮蜗杆卡箍φ 40-φ 60 12 DIN3017-1	5	1-39
40	ACE0000826.1	INTRET	空滤进气管	1	1-40
41	ACE0000827.1	INTRET	进气管	1	1-41

燃油系统安装(ACE0000855)

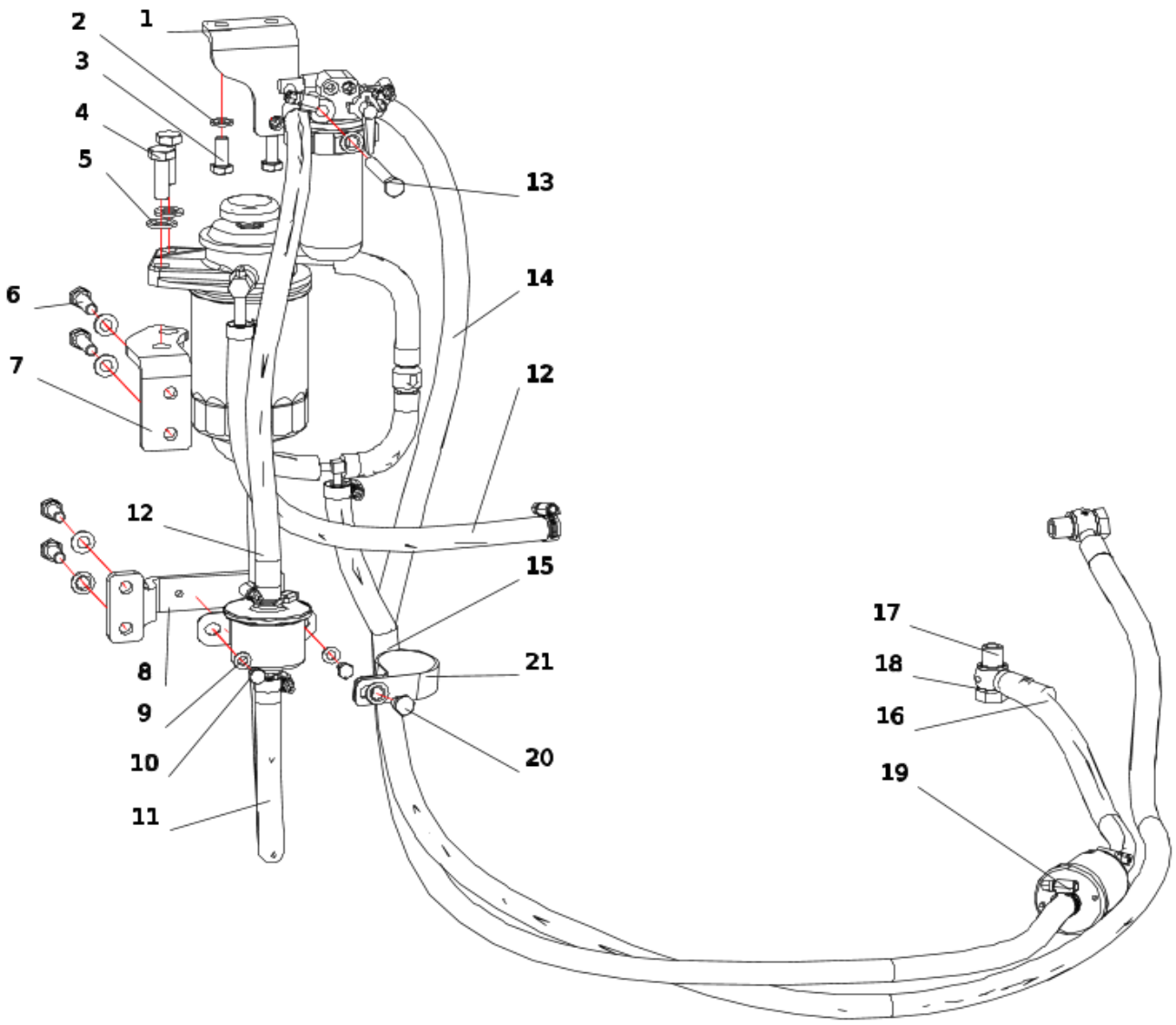

序号 POS	编码 CODE	DESCRIPTION	名称	数量 QTY	备注 remark
1	ACE0000856.1	BRACKET WELDING	油水分离器支架焊接	1	1-1
2	701508008001	WASHER	垫圈8-DKL GBT 1230	8	1-2
3	701104008027	BOLT	螺栓M8X20-10.9-DKL GB/T 5783	4	1-3
4	701104010034	BOLT	螺栓M10X30-10.9-DKL GB/T 5783	2	1-4
5	701508010001	WASHER	垫圈10-DKL GBT 1230	2	1-5
6	701104008037	BOLT	螺栓M8X30-8.8-DKL GB/T 5783	2	1-6
7	ACE0000858.1	BRACKET WELDING	柴滤支架焊接	1	1-7
8	ACE0000860.1	SUPPORT	电子泵支架	1	1-8
9	701504006002	WASHER	垫圈6-DKL GBT 97.1	2	1-9
10	701104006018	BOLT	螺栓M6X10-8.8-DKL GBT 5783	2	1-10
11	730599000123	DIESEL OIL PIPE	柴油管D8X600	1	1-11
12	730599000128	DIESEL OIL PIPE	柴油管D8X450	2	1-12,1-12
13	701103008038	BOLT	螺栓8.0X65.0-8.8-DKL GB/T 5782	1	1-13
14	730599001498	DIESEL PIPE	柴油管D08X1200-PG-1100	1	1-14
15	730599001067	DIESEL OIL PIPE	柴油管D08-1500-PG-1400 扣一头	1	1-15
16	730599001669	DIESEL PIPE	柴油管D08-600-PG-500 扣一头	1	1-16
17	739899000011	BOLT, HOLLOW	螺栓	2	1-17
18	703202014002	WASHER	组合垫圈14 JB982	4	1-18
19	701901016001	CLAMP, HOSE	德式涡轮蜗杆卡箍φ10-φ16 9 DIN3017-1	10	1-19
20	701104008043	BOLT	螺栓M8X12-8.8-DKL GB/T 5783	1	1-20
21	729808000142	WIRE CLAMP	线卡14010 卡孔φ40安装孔φ10	1	1-21

冷却系统安装-null(ACE0000861)

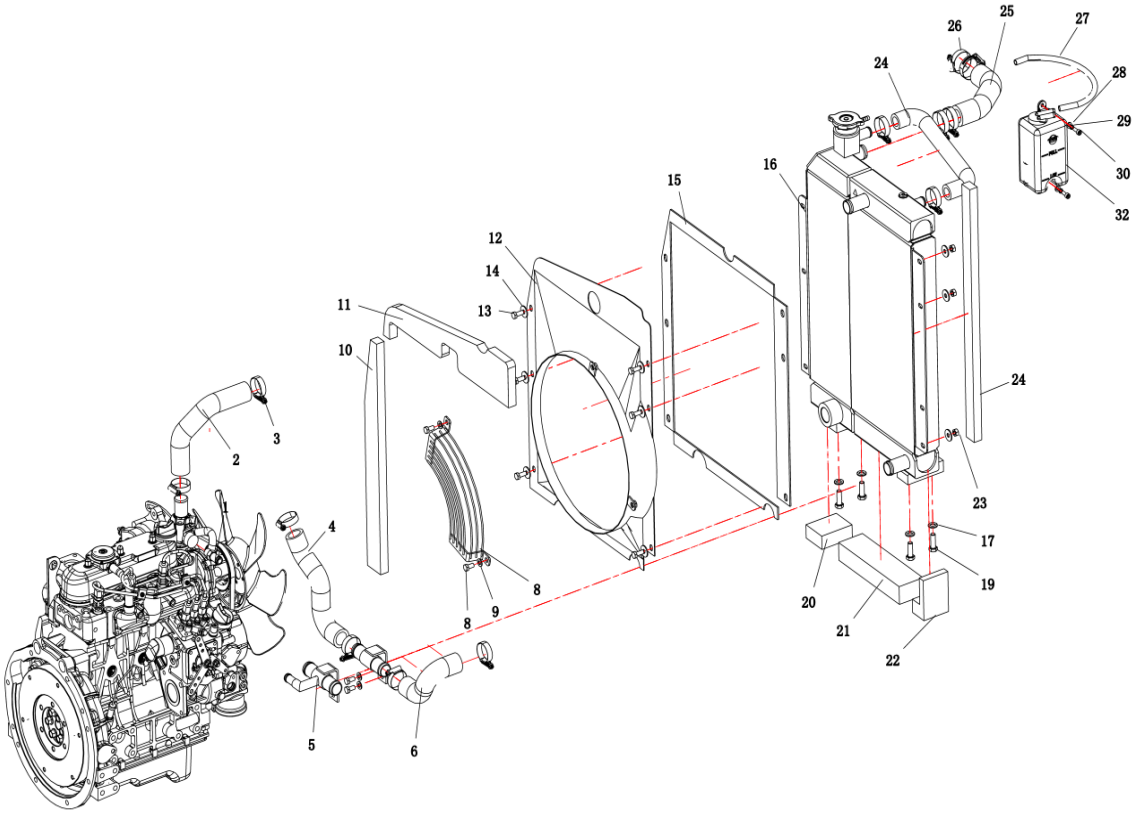

序号 POS	编码 CODE	DESCRIPTION	名称	数量 QTY	备注 remark
1	ACE0000862.1	CONNECT	发动机暖水进出接头	1	1-1
2	ACE0000863.1	DISCHARGING TUBE	出水管	1	1-2
3	751011000087	CLAMP	德式涡轮蜗杆卡箍φ25-φ40 12 DIN3017-1	8	1-3
4	ACE0000872.1	TUBE	进水管1	1	1-4
5	ACE0000873.1	CONNECT	三通	1	1-5
6	ACE0000871.1	TUBE	进水管2	1	1-6
7	ACE0000868.1	PROTECTIVE COVER	防护罩	1	1-7
8	701104008026	BOLT	螺栓	4	1-8
9	701504008005	WASHER	垫圈8.0200 HV-DKL GBT 97.1	4	1-9
10	ACE0000262.1	THE INSIDE SPONGE	水箱侧海绵	1	1-10
11	ACE0000261.2	UP SPONGE	水箱上海绵	1	1-11
12	ACE0000865.1	WIND HOOD WELDING	导风罩焊接	1	1-12
13	701104008031	BOLT	螺栓M8X20-8.8-DKL GB/T 5783	6	1-13
14	701506008002	WASHER	垫圈8-DKL GBT 96.1	12	1-14
15	ACE0001544.2	SEALING GASKET	水箱密封垫	1	1-15
16	750203000415	RADIATOR ASSY	散热器4842.244.0000	1	1-16
17	701508010001	WASHER	垫圈10-DKL GBT 1230	4	1-17
18	701104010034	BOLT	螺栓M10X30-10.9-DKL GB/T 5783	4	1-18
19	ACE0000263.1	DOWN SPONGE	水箱下小海绵	1	1-19
20	ACE0000264.1	DOWN SPONGE	水箱下海绵	1	1-20
21	ACE0000265.1	DOWN SPONGE	水箱下梯形海绵	1	1-21
22	701406008004	NUT	螺母M8-8-DKL GBT 6170	6	1-22
23	ACE0000864.1	SPONGE	水散侧海绵	1	1-23
24	ACE0000270.1	CONNECTING HOSE	连接水管	1	1-24
25	ACE0000268.1	OIL RETURN HOSE	回油胶管	1	1-25
26	751011000185	CLAMP	德式涡轮蜗杆卡箍φ30-φ45 12 DIN3017-1	4	1-26
27	712412990015	RUBBER WATER PIPE	橡胶水管TP10(外径)X1.5	1	1-27
28	701504006002	WASHER	垫圈6-DKL GBT 97.1	2	1-28
29	701510006003	WASHER	垫圈6-DKL GB/T 93	2	1-29
30	701302006038	SCREW	螺钉M6X16-8.8-DKL GBT 70.1	2	1-30
31	750203010022	SECONDARY WATER TANK	副水箱F-XD007	1	1-31

中间密封件安装-null(ACE0000553)

INSTALLATION FO INTERMEDIATE SEALS

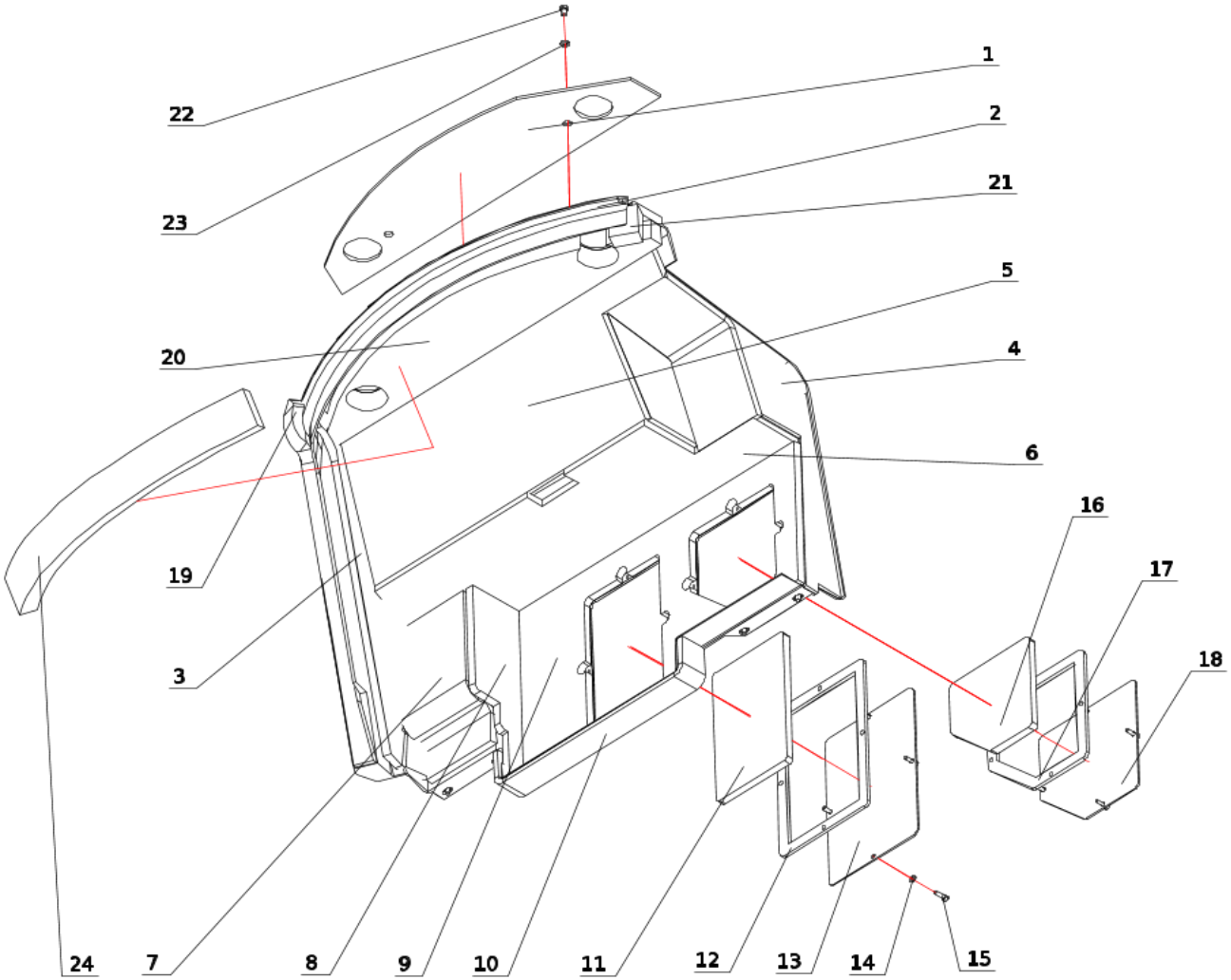

序号 POS	编码 CODE	DESCRIPTION	名称	数量 QTY	备注 remark
1	ACE0000555.1	UPPER SPONGE	中间密封件上海绵	1	1-1
2	ACE0000554.1	INTERMEDIATE SEALS	中间密封件	1	1-2
3	ACE0000556.1	LATERAL SPONGE	中间密封件侧海绵2	1	1-3
4	ACE0000557.1	LATERAL SPONGE	中间密封件侧海绵1	1	1-4
5	ACE0000558.1	INSULATING SPONGE	中间密封件隔热海绵1	1	1-5
6	ACE0000559.1	INSULATING SPONGE	中间密封件隔热海绵2	1	1-6
7	ACE0000562.1	INSULATING SPONGE	中间密封件隔热海绵5	1	1-7
8	ACE0000563.1	INSULATING SPONGE	中间密封件隔热海绵6	1	1-8
9	ACE0000564.1	INSULATING SPONGE	中间密封件隔热海绵7	1	1-9
10	ACE0000565.1	SUBSPONGE	中间密封件下海绵	1	1-10
11	ACE0000567.1	INSULATING SPONGE	中间隔板隔热海绵6	1	1-11
12	ACE0000689.1	SEALING GASKET	检修盖板1密封垫	1	1-12
13	ACE0000566.1	INSPECTION PLATE	检修板1	1	1-13
14	701504006002	WASHER	垫圈6-DKL GBT 97.1	8	1-14
15	701302006032	SCREW	螺钉M6X20-8.8-DKL GB/T 70.1	8	1-15
16	ACE0000569.1	INSULATING SPONGE	中间隔板隔热海绵7	1	1-16
17	ACE0000570.2	SEALING GASKET	检修盖板2密封垫	1	1-17
18	ACE0000568.1	INSPECTION PLATE	检修板2	1	1-18
19	ACE0000571.1	LEFT SIDE SEALING SPONGE	左侧密封海绵	1	1-19
20	ACE0000573.1	AFTERHEAT INSULATING SPONGE	后隔热海绵	1	1-20
21	ACE0000572.1	RIGHT REAR SEAL SPNGE	中间密封件右后密封海绵	1	1-21
22	701104008043	BOLT	螺栓M8X12-8.8-DKL GB/T 5783	6	1-22
23	701504008005	WASHER	垫圈8.0200 HV-DKL GBT 97.1	6	1-23
24	ACE0001675.2	SUBSPONGE	中间密封件海绵	1	1-24

底封板安装(ACE0000580)

INSTALLATION OF BOTTOM SEALING PLATE

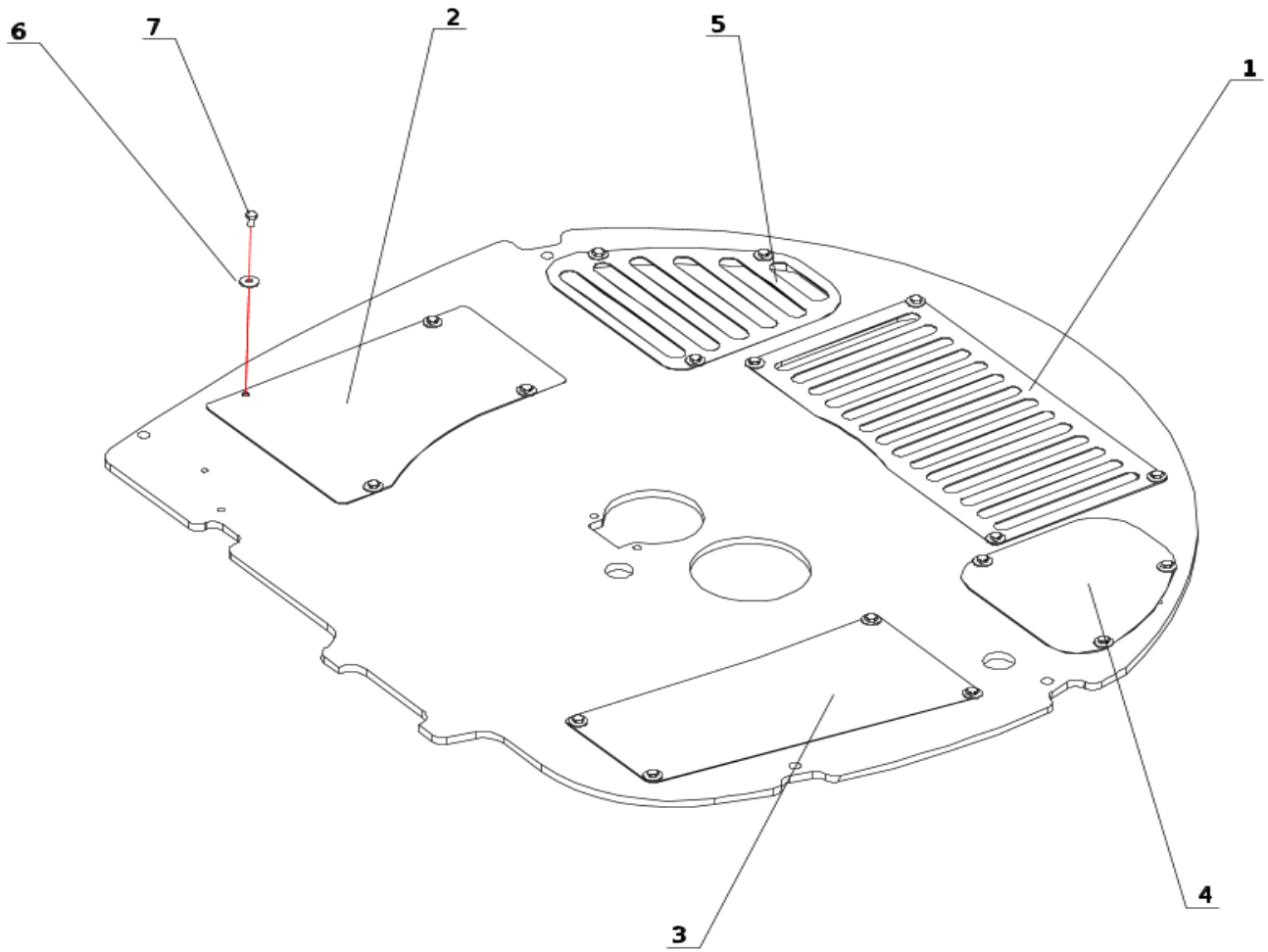

序号 POS	编码 CODE	DESCRIPTION	名称	数量 QTY	备注 remark
1	ACE0000581.1	BOTTOM SEALING PLATE	底封板1	1	1-1
2	ACE0000582.1	BOTTOM PLATE	底板2	1	1-2
3	ACE0000583.1	BOTTOM SEALING PLATE	底封板3	1	1-3
4	ACE0000584.1	BOTTOM SEALING PLATE	底封板04	1	1-4
5	ACE0000585.1	BOTTOM SEALING PLATE	底封板05	1	1-5
6	701506008002	WASHER	垫圈8-DKL GBT 96.1	18	1-6
7	701104008026	BOLT	螺栓	18	1-7

围边安装支架组件(ACE0000592)

BRACKET ASSEMBLY

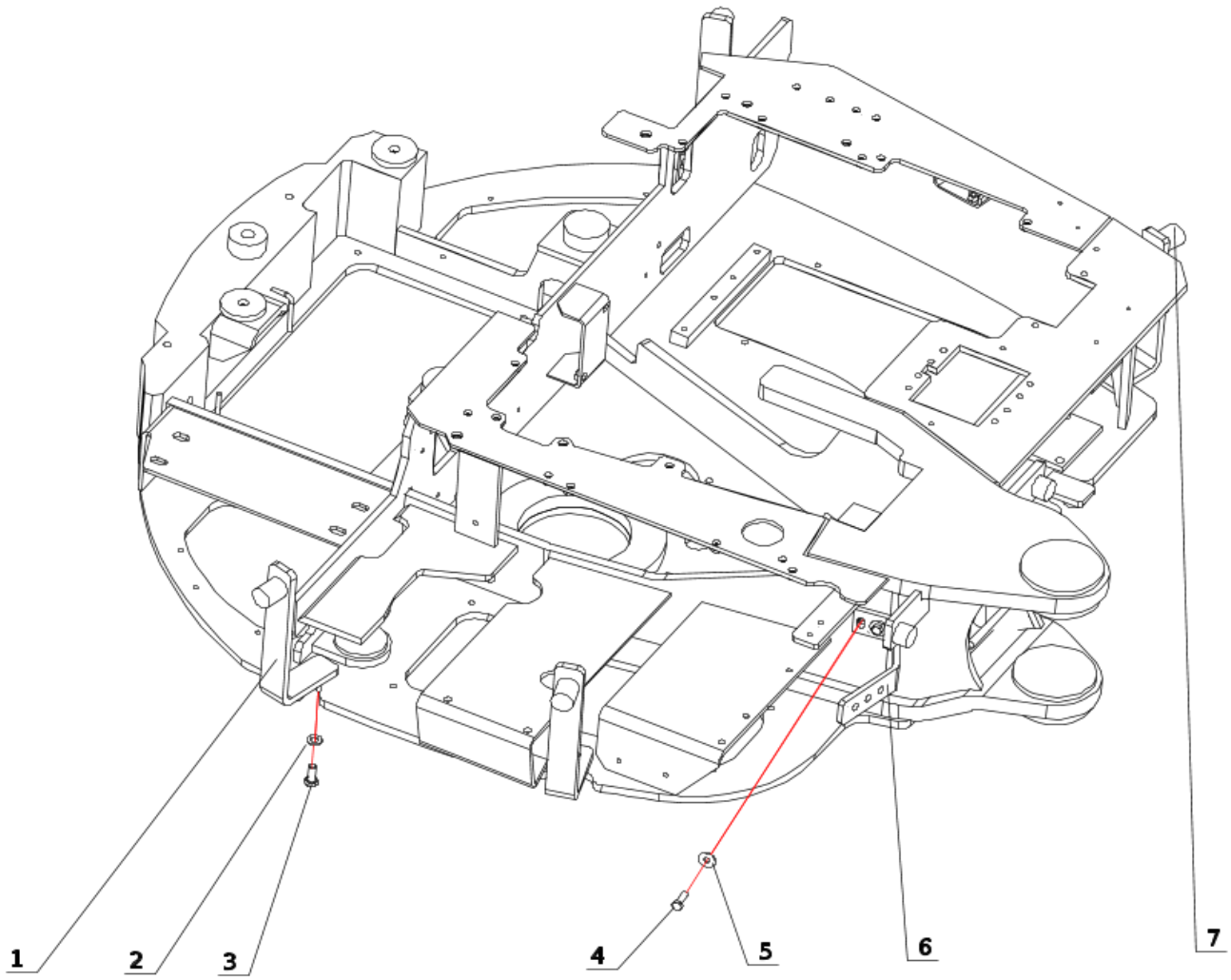

序号 POS	编码 CODE	DESCRIPTION	名称	数量 QTY	备注 remark
1	ACE0000594.1	MOUNTING BRACKET	围边安装支架1	3	1-1
2	701504010004	WASHER	垫圈10-DKL GBT 97.1	4	1-2
3	701104010033	BOLT	螺栓M10X25-10.9-DKL GB-T 5783	4	1-3
4	701104008028	BOLT	螺栓8X25-8.8-DKL GB/T 5783	2	1-4
5	701506008002	WASHER	垫圈8-DKL GBT 96.1	2	1-5
6	ACE0000593.1	MOUNTING BRACKET	黄油注油管安装支架	1	1-6
7	ACE0000598.1	MOUNTING BRACKET	围边安装支架2	1	1-7

司机工作台安装-null(ACE0000355)

DRIVER BENCH INSTALLATION

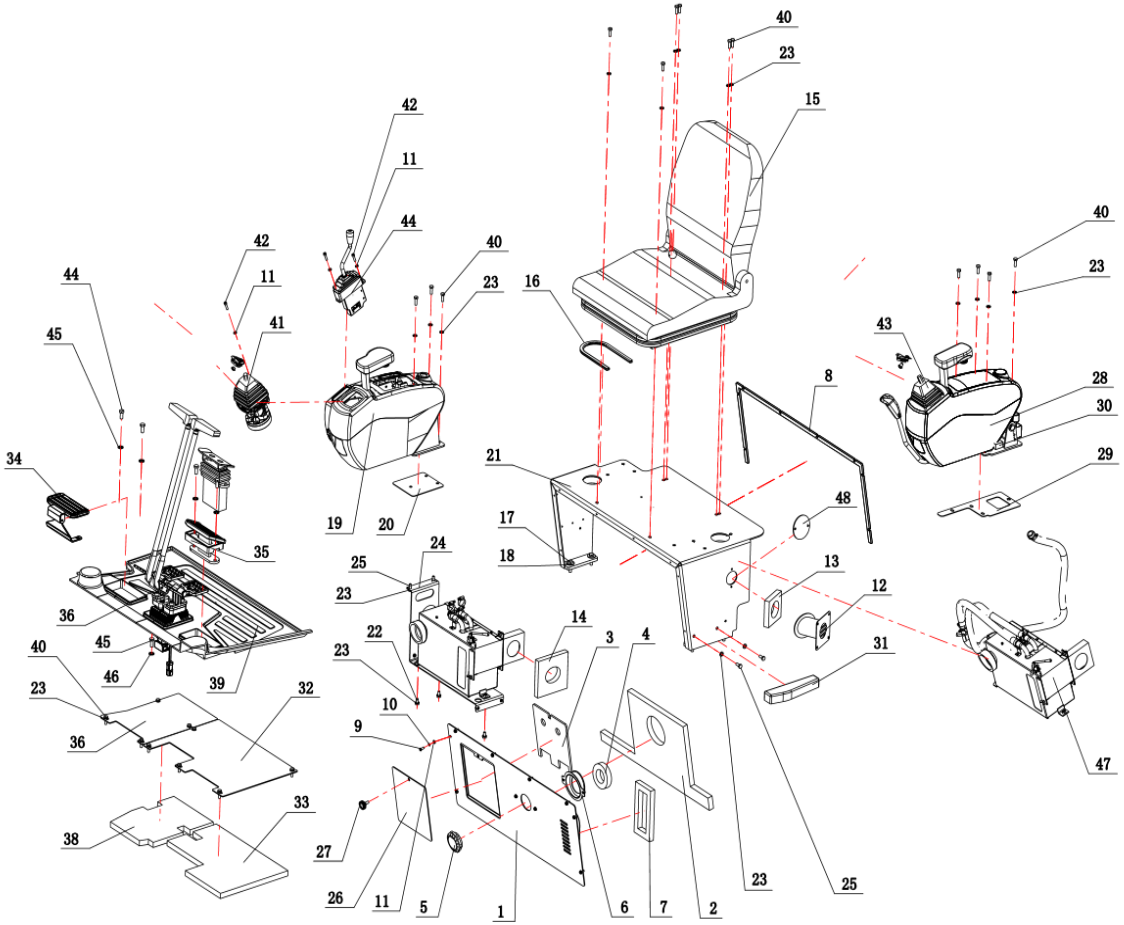

序号 POS	编码 CODE	DESCRIPTION	名称	数量 QTY	备注 remark
1	ACE0000356.2	FRONT PLATE WELDING	前盖板焊接	1	1-1
2	ACE0000364.1	FRONT PANEL INSULATION SPONGE	前板隔热海绵	1	1-2
3	ACE0000365.1	ACCESS DOOR SPONGE	检修门海绵	1	1-3
4	ACE0000366.1	AIR OUTLET SPONGE	出风口海绵	1	1-4
5	750719010094	WINDBALL	风球TD065（不带接管）	1	1-5
6	ACE0000367.2	AIR OUTLET ASSEMBLY	出风口组件	1	1-6
7	ACE0000371.1	TUYERE SPONGE	吸风口海绵	1	1-7
8	ACE0000372.1	LARGE CURVED PLATE FRONT INSULATION	大弯板前隔热海绵	1	1-8
9	701104006023	BOLT	螺栓M6X12-8.8-DKL GB/T 5783	10	1-9
10	701510006003	WASHER	垫圈6-DKL GB/T 93	10	1-10
11	701504006002	WASHER	垫圈6-DKL GBT 97.1	20	1-11,1-11,1-11
12	ACE0000373.1	WELDING OF THE OUTER TUYERE ASSEMBLY	外风口组件焊接	1	1-12
13	ACE0000377.1	OUTER TUYERE SPONGE 1	外风口海绵1	1	1-13
14	ACE0000378.2	OUTER TUYERE SPONGE 2	外风口海绵2	1	1-14
15	750702010037	SEAT	座椅SC29-32	1	1-15
16	750001000016	RUBBER STRIP, FIXED	固定胶条（新F704型）	1	1-16
17	701104010037	BOLT	螺栓M10X35-10.9-DKL GB/T 5783	4	1-17
18	701506010003	WASHER	垫圈10-DKL GB／T 96.1	4	1-18
19	ACE0000379.2	RIGHT CONTROL BOX	CFG35UF右操纵箱	1	1-19
20	ACE0000380.1	CONTROL BOX SHOCK PAD	右操纵箱减震垫	1	1-20
21	ACE0000381.2	WELDING OF CONSOLE MOUNTING PLATE	操作台安装板焊接	1	1-21
22	701104008026	BOLT	螺栓	3	1-22
23	701504008005	WASHER	垫圈8.0200 HV-DKL GBT 97.1	29	1-23
24	ACE0000389.1	MOUNTING PLATE WELDING	暖风机安装板焊接	1	1-24
25	701104008031	BOLT	螺栓M8X20-8.8-DKL GB/T 5783	4	1-25
26	ACE0000392.1	ACCESS DOOR WELDING	检修门焊接	1	1-26
27	750708010053	KNOB	扶手调整旋钮	1	1-27
28	ACE0000397.1	LEFT CONTROL BOX	CFG35UF左操纵箱	1	1-28
29	ACE0000399.1	LEFT CONTROL BOX SHOCK PAD	左操纵箱减震垫	1	1-29
30	720235000024	SWITCH	微动开关	1	1-30
31	ACE0000400.1	LEFT RUBBER PAD	左侧橡胶垫	1	1-31

司机工作台安装-null(ACE0000355)

DRIVER BENCH INSTALLATION

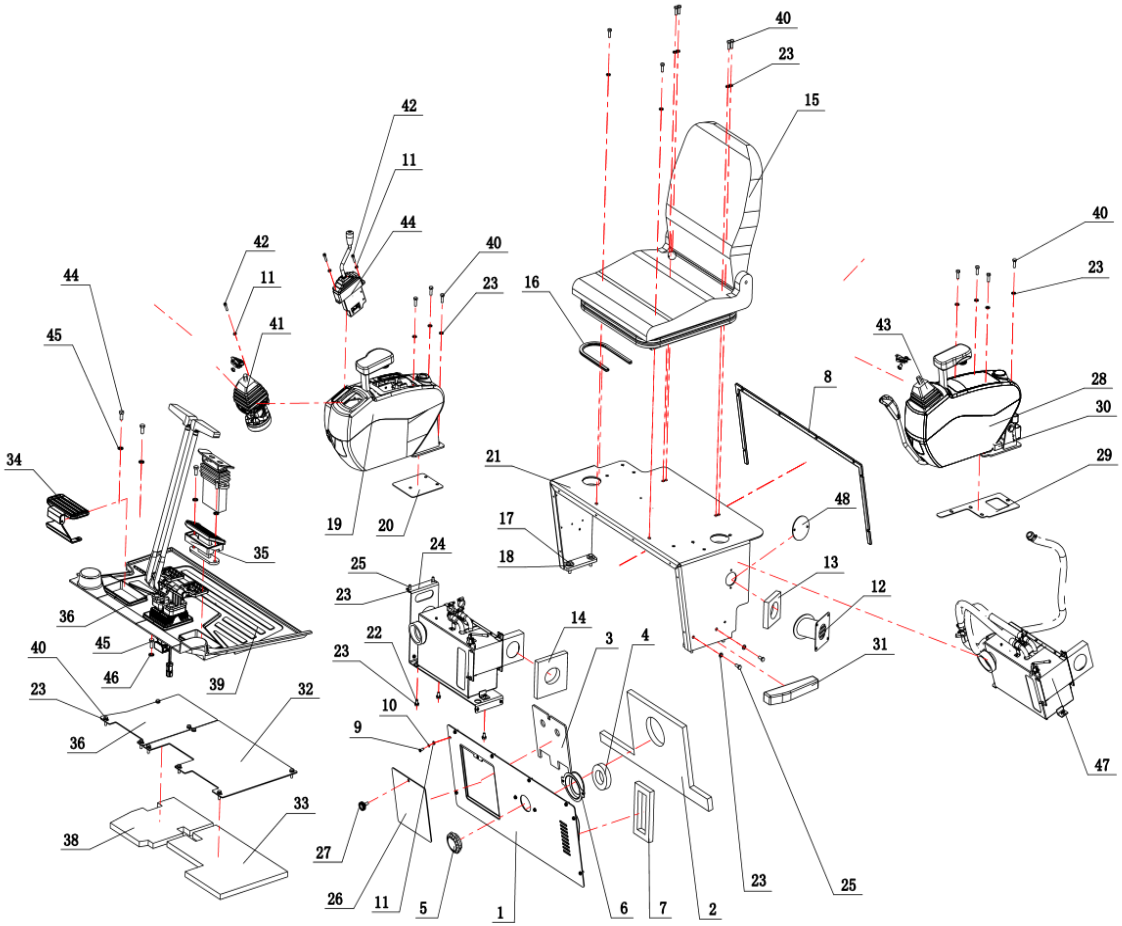

序号 POS	编码 CODE	DESCRIPTION	名称	数量 QTY	备注 remark
32	ACE0000401.1	LEFT FOOT PEDAL	左脚踏板	1	1-32
33	ACE0000402.1	INSULATING SPONGE	左脚踏隔热海绵	1	1-33
34	750608010006	LEFT PEDAL ASSEMBLY	左踏板总成700900500	1	1-34
35	ACE0000404.1	LEFT RUBBER PAD 2	左侧橡胶垫2	1	1-35
36	ACE0000405.2	WALKING CONTROL ASSEMBLY	行走操纵总成-null	1	1-36
37	ACE0000417.1	RIGHT PEDAL	右脚踏板	1	1-37
38	ACE0000418.1	RIGHT INSULATED	右脚踏隔热海绵	1	1-38
39	ACE0000419.1	RUBBER FOOT PAD	CFG35UF脚踏橡胶垫	1	1-39
40	701104008028	BOLT	螺栓8X25-8.8-DKL GB/T 5783	22	1-40
41	730309000414	RIGHT PILOT HANDLE	右先导手柄810900238	1	1-41
42	701302006033	SCREW	螺钉M6X25-8.8-DKL GBT 70.1	10	1-42
43	730309000412	LEFT PILOT HANDLE	左先导手柄810900237	1	1-43
44	730309000352	BOLLDOZER VALVE	推土先导操纵阀811200055	1	1-44
45	701104010032	BOLT	螺栓	8	1-45
46	701508010001	WASHER	垫圈10-DKL GBT 1230	8	1-46
47	ACE0000925.2	Heater installation	暖风机安装	1	1-47

暖风机安装(ACE0000925)

Heater installation

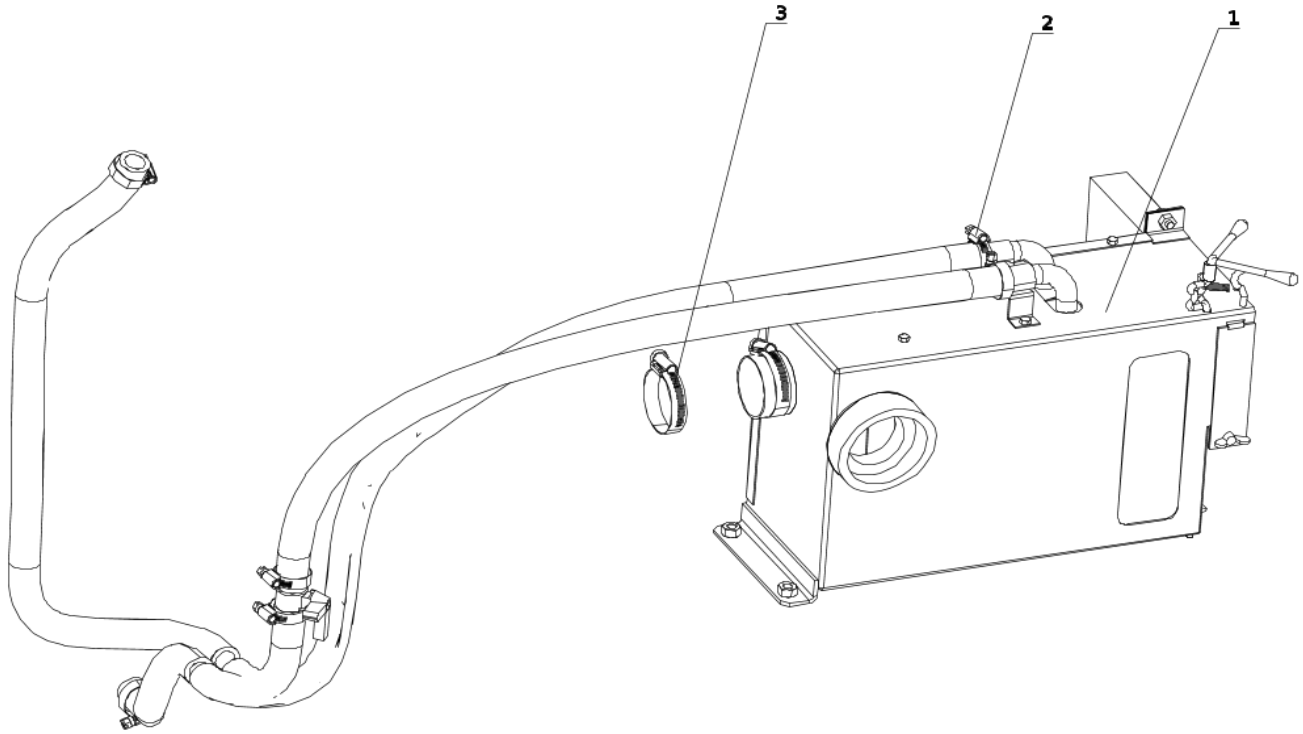

序号 POS	编码 CODE	DESCRIPTION	名称	数量 QTY	备注 remark
1	750703000082	AIR HEATER ASSEMBLY	暖风机总成NT55A	1	1-1
2	751008000258	TURBINE ROD CLAMP	德式涡轮蜗杆卡箍φ16-φ27 9 DIN3017-1	6	1-2
3	751011000090	TURBINE ROD CLAMP	德式涡轮蜗杆卡箍φ35-φ50 12 DIN3017-1	2	1-3

行走操纵总成-null(ACE0000405)

WALKING CONTROL ASSEMBLY

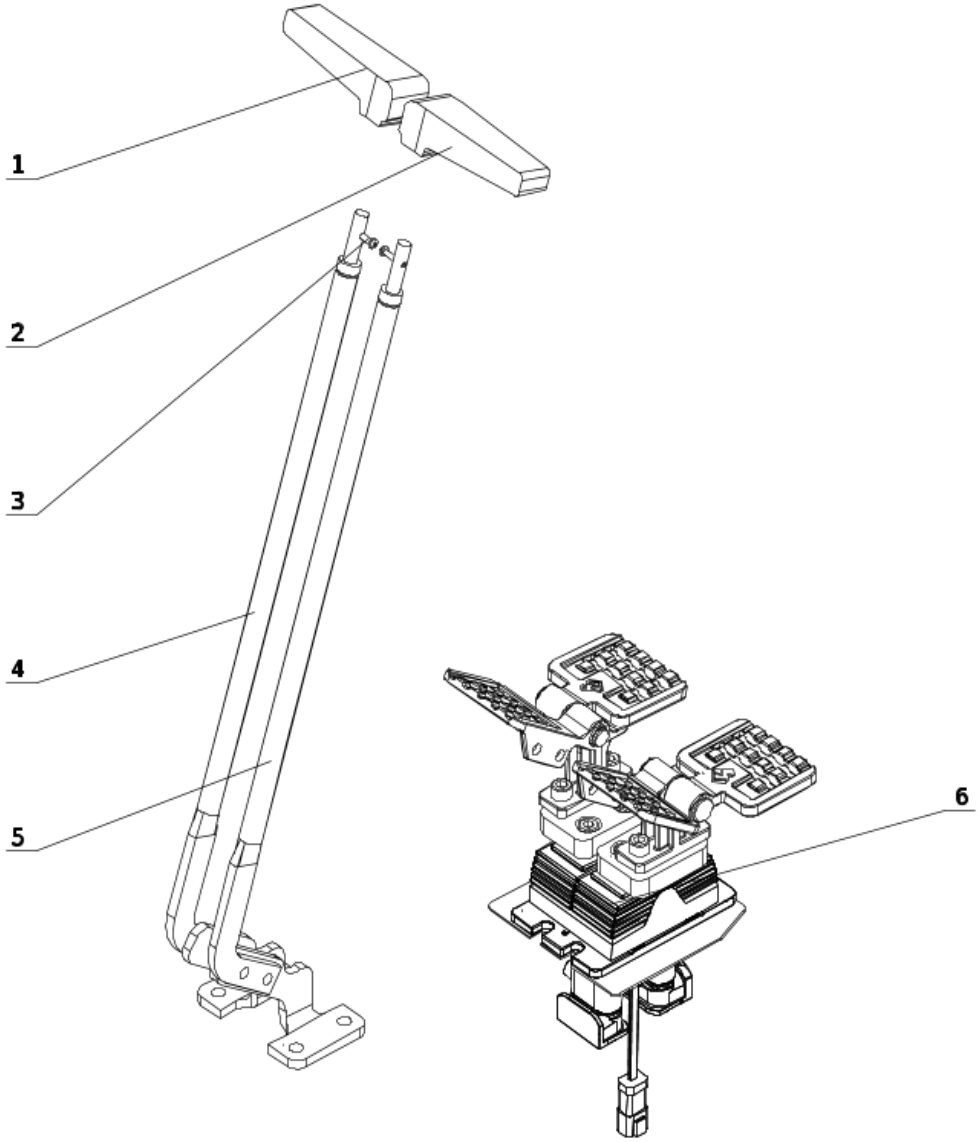

序号 POS	编码 CODE	DESCRIPTION	名称	数量 QTY	备注 remark
1	750099000007	HANDLE	手柄 2132-1133(R)	1	1-1
2	750099000008	HANDLE	手柄 2132-1134B(L)	1	1-2
3	701309004004	SCREW	螺钉M4X20-ZnD GBT 818	2	1-3
4	ACE0000410.2	RIGHT WALK BAR WELDING	右行走杆焊接	1	1-4
5	ACE0000406.2	LEFT WALKING ROD WELDING	左行走杆焊接	1	1-5
6	ACE0000414.2	DOUBLE FOOT VALVE ASSEMBLY	双联脚踏阀总成（带行走蜂鸣功能）-null	1	1-6

双联脚踏阀总成（带行走蜂鸣功能）-null(ACE0000414)

DOUBLE FOOT VALVE ASSEMBLY

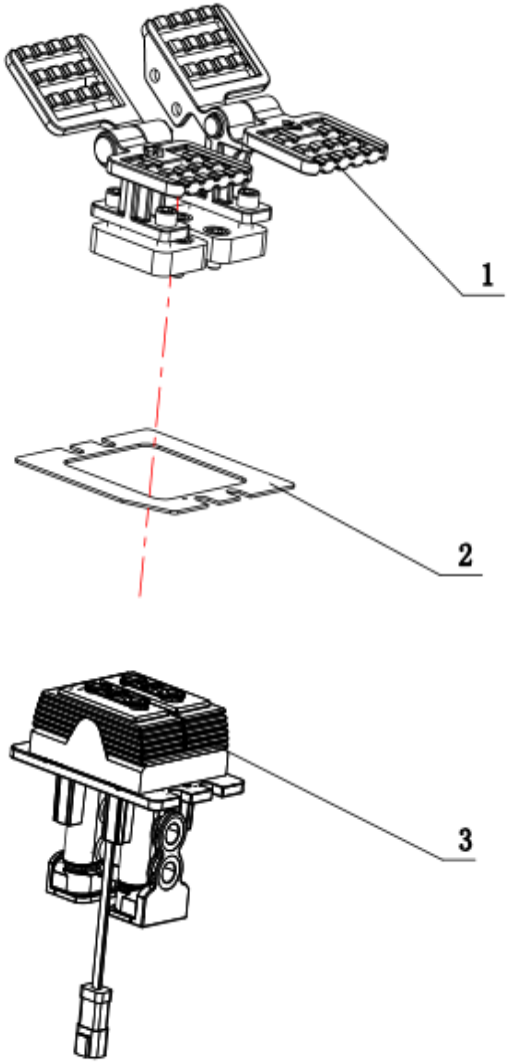

序号 POS	编码 CODE	DESCRIPTION	名称	数量 QTY	备注 remark
1	ACE0000415.1	GANGPLANK	左-右踏板组件（M10 38X50）	1	
2	ACE0000416.1	PLATE	脚踏阀过渡板	1	
3	730309000527	WALKING FOOT VALVE	行走脚踏阀	1	

左-右踏板组件（M10 38X50）(ACE0000415)

PEDAL ASSEMBLY

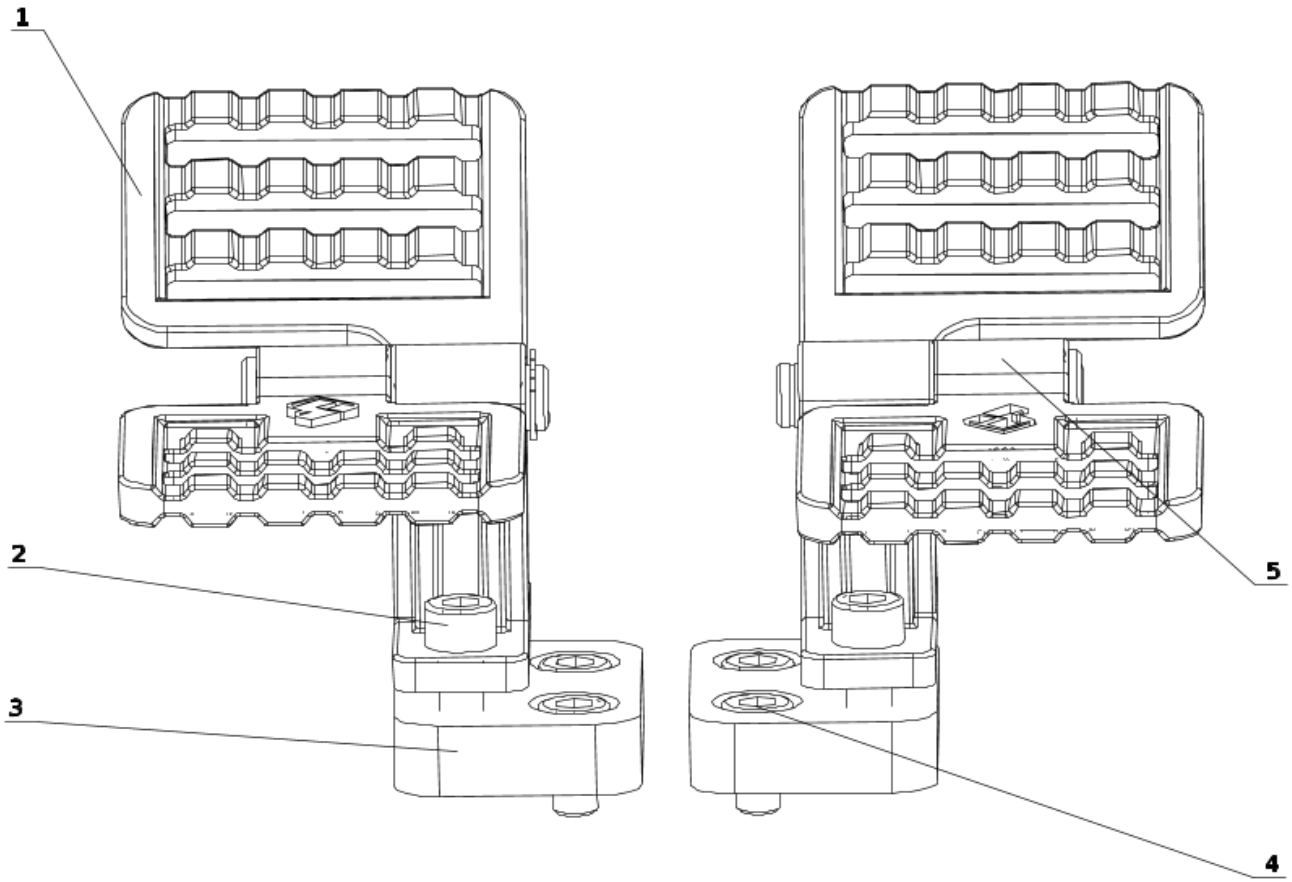

序号 POS	编码 CODE	DESCRIPTION	名称	数量 QTY	备注 remark
1	751501001138	LEFT PEDAL	左踏板组件111000077	1	1-1
2	739900001136	SCREW	内六角圆柱头螺钉M10X30 600200022	4	1-2
3	739899002391	PLATE	脚踏过渡板50X38	2	1-3
4	739899002394	SCREW	内六角圆柱头螺钉M10X16 600200005	4	1-4
5	751501001139	RIGHT PEDAL	右踏板组件111000078	1	1-5

CFG35UF左操纵箱(ACE0000397)

LEFT CONTROL BOX

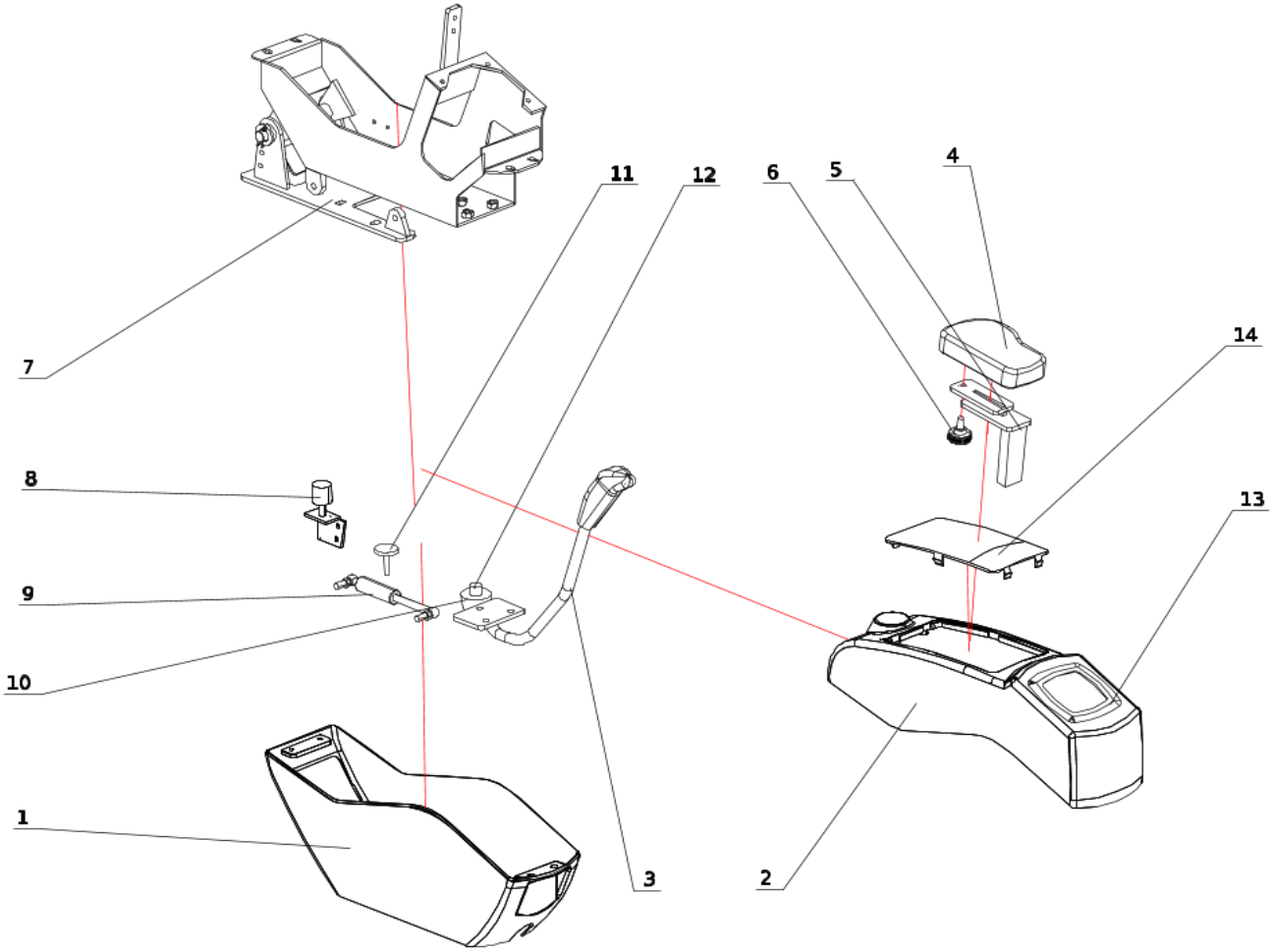

序号 POS	编码 CODE	DESCRIPTION	名称	数量 QTY	备注 remark
1	750708010024		小挖底座SD007	1	1-1
2	750606010056		小挖上盖SD008	1	1-2
3	750708010034		左安全操作手柄	1	1-3
4	750708010051		微挖左扶手L SD-FX25U-01	1	1-4
5	750708010052		扶手支架SD-FSZJ-25U	1	1-5
6	750708010053		扶手调整旋钮	1	1-6
7	750708010033		操纵箱左骨架	1	1-7
8	750606010065		限位支座	1	1-8
9	750701000145		气弹簧	1	1-9
10	750708010028		缓冲挡块YZC7.17.4(M10-50)	1	1-10
11	750606010059		微动开关接触板	1	1-11
12	750606010066		缓冲装置	1	1-12
13	750606010057		小挖先导盖板SD0013	1	1-13
14	750606010058		小挖左上盖板SD010R-005-SW40Z	1	1-14

CFG35UF右操纵箱(ACE0000379)

RIGHT CONTROL BOX

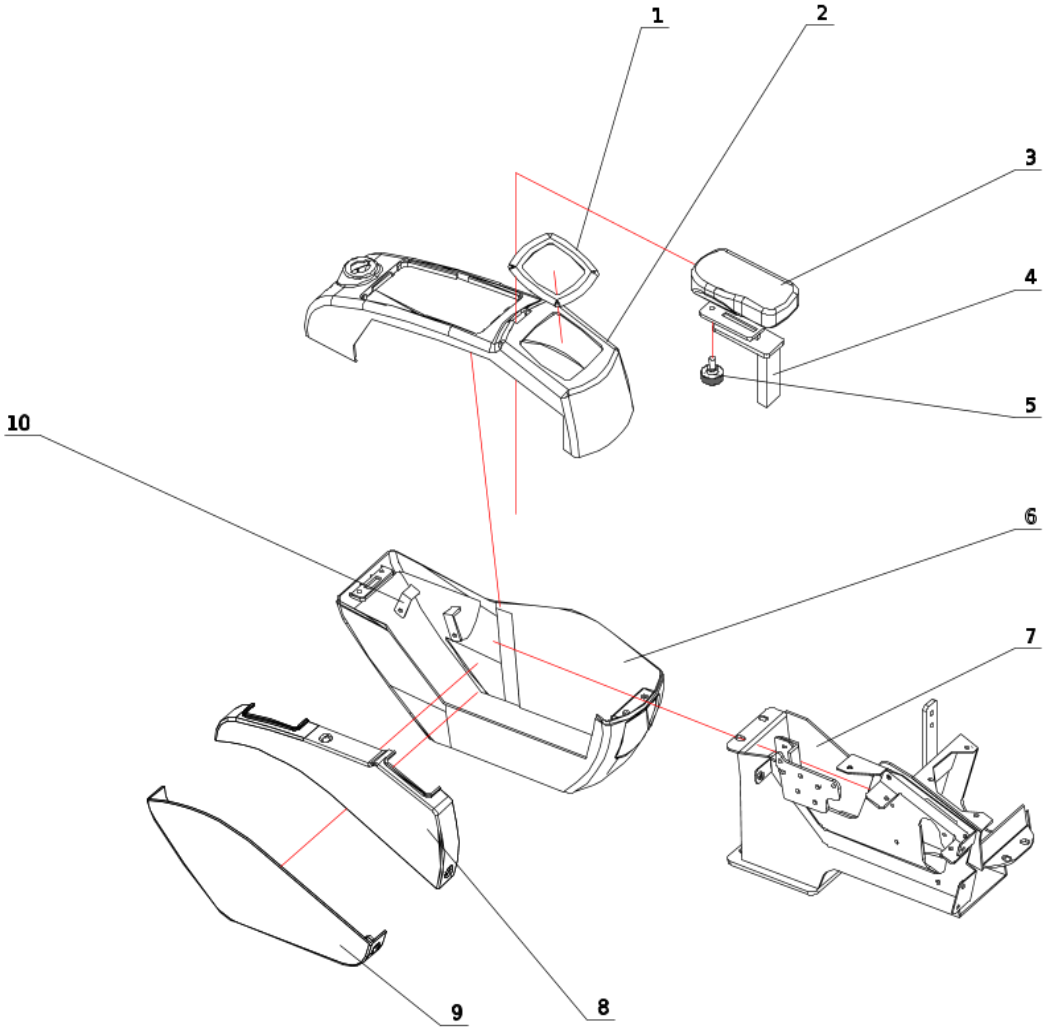

序号 POS	编码 CODE	DESCRIPTION	名称	数量 QTY	备注 remark
1	750606010057		小挖先导盖板SD0013	1	1-1
2	750606010060		小挖右上盖SD008	1	1-2
3	750708010054		微挖右扶手R SD-FX25U-02	1	1-3
4	750708010052		扶手支架SD-FSZJ-25U	1	1-4
5	750708010053		扶手调整旋钮	1	1-5
6	750708010029		小挖右底座SD007	1	1-6
7	750708010036		右骨架	1	1-7
8	750606010061		侧上壳SD-SW40YS	1	1-8
9	750606010062		侧下壳SD-SW40YX	1	1-9
10	750606010067		油门拉杆限位块	2	1-10

平台海绵总成-null(ACE0000610)

PLATFORM SPONGE ASSEMBLY

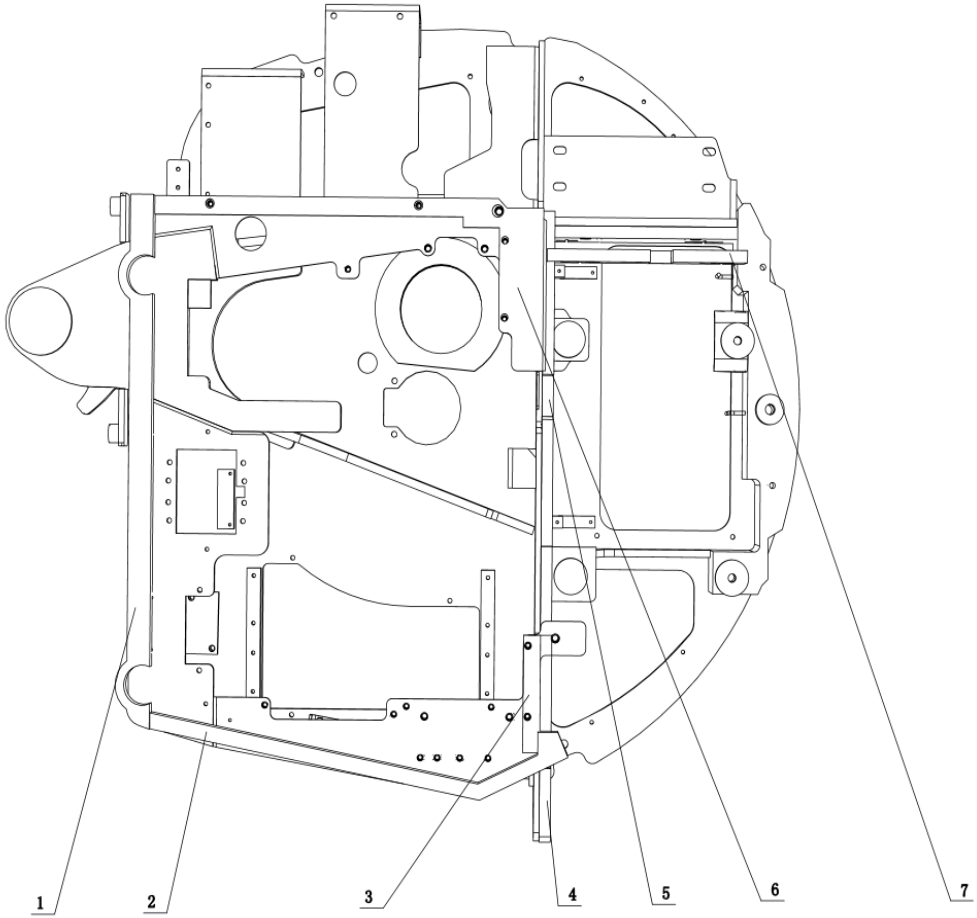

序号 POS	编码 CODE	DESCRIPTION	名称	数量 QTY	备注 remark
1	ACE0000611.2	PROSPONGE	平台前海绵	1	1-1
2	ACE0000612.2	LEFT SPONGE	平台左海绵	1	1-2
3	ACE0000613.2	SPONGE	平台海绵3	1	1-3
4	ACE0000614.1	SPONGE	平台横梁海绵1	1	1-4
5	ACE0000615.1	SPONGE	平台横梁海绵2	1	1-5
6	ACE0000616.1	SPONGE	平台海绵5	1	1-6
7	ACE0000618.1	POSTSPONGE	平台右主梁后海绵2	1	1-7

油箱总成(ACE0000294)

TANK ASSEMBLY

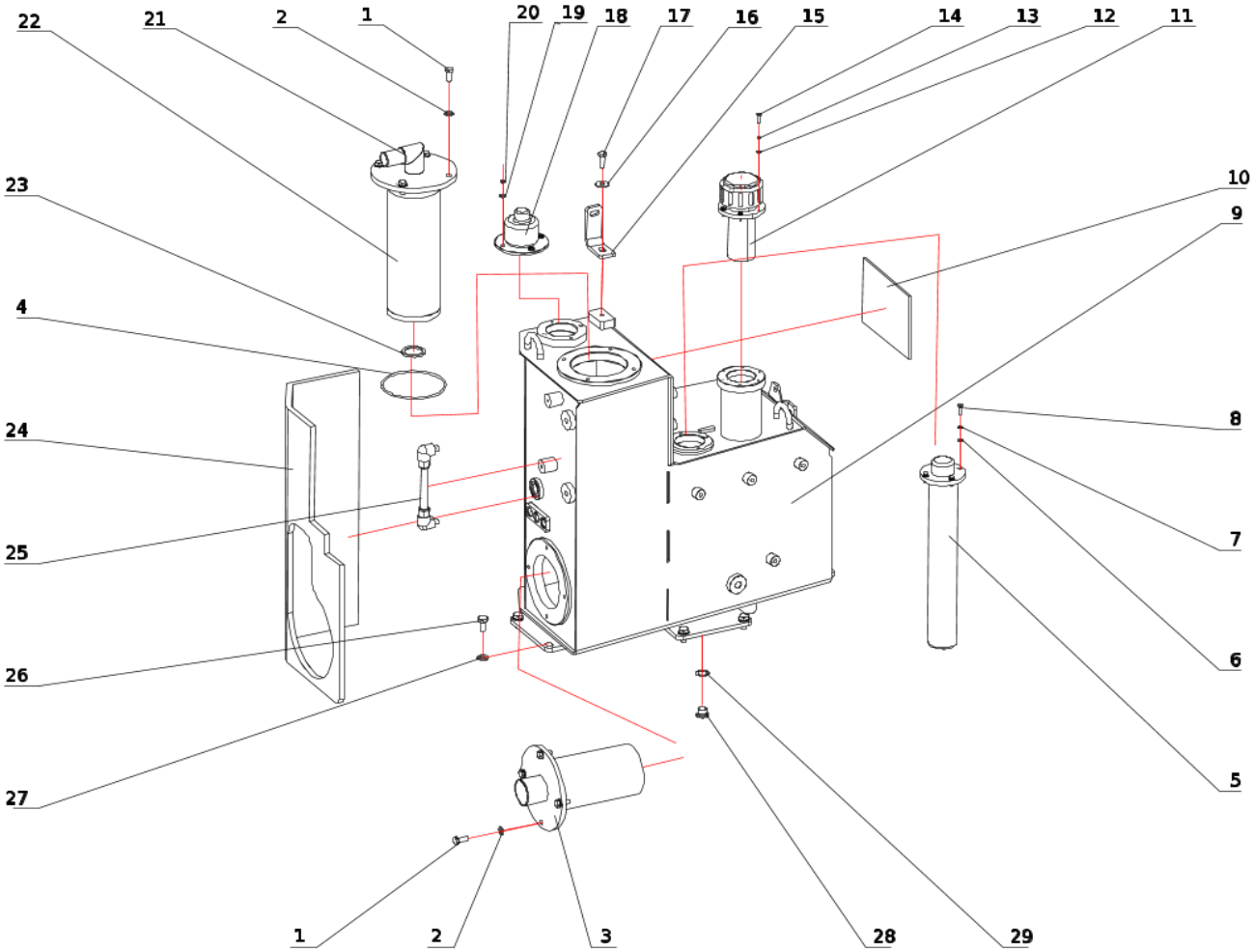

序号 POS	编码 CODE	DESCRIPTION	名称	数量 QTY	备注 remark
1	701104008027	BOLT	螺栓M8X20-10.9-DKL GB/T 5783	8	1-1,1-1
2	701504008005	WASHER	垫圈8.0200 HV-DKL GBT 97.1	8	1-2,1-2
3	730402000241	OIL-ABSORBING FILTER	吸油滤芯KUT-0200100F	1	1-3
4	703201109001	O-RING	O形圈109X3.55-G-N GB-T 3452.1	1	1-4
5	720223000064	LIQUID LEVEL SENSOR	液位传感器KLRG327SH	1	1-5
6	701504005002	WASHER	垫圈5-DKL GB/T 97.1	4	1-6
7	701510005002	WASHER	垫圈5-DKL GBT 93	4	1-7
8	701104005001	BOLT	螺栓M5X16-8.8-ZnD GB/T 5783	4	1-8
9	ACE0000296.3	TANK WELDING	油箱焊接	1	1-9
10	ACE0000532.1	RUBBER SEPARATOR	橡胶隔板	1	1-10
11	730402000019	AIR FILTER	预压式空滤器TM278G100P3	1	1-11
12	701504004002	WASHER	垫圈4-DKL GBT 97.1	6	1-12
13	701510004003	WASHER	垫圈4-DKL GBT 93	6	1-13
14	701309004013	SCREW	螺钉M4X16-ZnD GBT 818	6	1-14
15	ACE0002337.1	MIDDLE PARTITION MOUNTING BRACKET	中间隔板安装支架	1	1-15
16	701506008002	WASHER	垫圈8-DKL GBT 96.1	1	1-16
17	701104008032	BOLT	螺栓M8X25-10.9-DKL GB/T 5783	1	1-17
18	730402000229	AIR FILTER	空气滤清器AB0210BA010A	1	1-18
19	701504006002	WASHER	垫圈6-DKL GBT 97.1	4	1-19
20	701510006003	WASHER	垫圈6-DKL GB/T 93	4	1-20
21	ACE0000493.2	OIL RETURN PORT FLANGE	回油口法兰	1	1-21
22	730403000401	RETURN OIL FILTER	回油滤芯KSP-0200010L	1	1-22
23	703202033001	COMBINATION OF WASHERS	组合垫圈33 JB982	1	1-23
24	ACE0000295.1	HYDRAULIC TANK SPONGE	液压油箱海绵	1	1-24
25	739801000013	LEVEL GAUGE	液位计YW20-3	1	1-25
26	701104010003	BOLT	螺栓	6	1-26
27	701504010004	WASHER	垫圈10-DKL GBT 97.1	6	1-27
28	703269016002	PLUG SCREW	内六角螺塞M16X1.5-ZnD JB/ZQ4444	2	1-28
29	703202016001	WASHER SET	组合垫圈16 JB982	2	1-29

上车液压系统（恒立—国际）(ACE0000787)

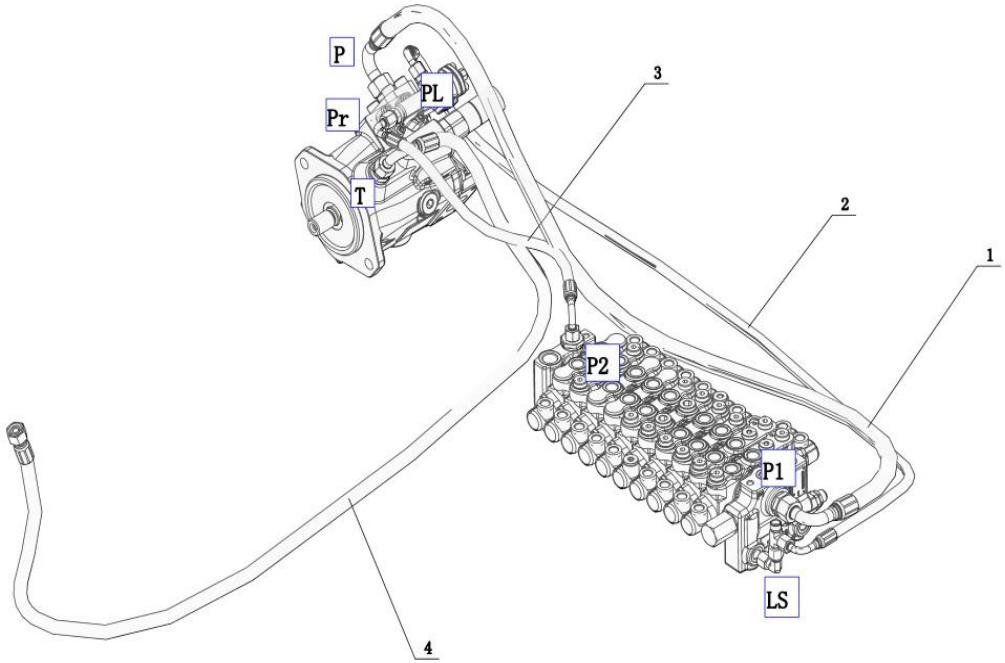

序号 POS	编码 CODE	DESCRIPTION	名称	数量 QTY	备注 remark
1	730504008653	HOSE ASSEMBLY	胶管总成F431CFCF151508-1250-90°	1	1-1
2	730503001553	HOSE ASSEMBLY	胶管总成F431CFCF080804-1300-0°	1	1-2
3	73050400B104	HOSE ASSEMBLY	胶管总成F431CFCF080804-480-135°	1	1-3
4	73050200B744	HOSE ASSEMBLY	胶管总成F481CACF121206-1560	1	1-4

上车液压系统（恒立—国际）(ACE0000787)

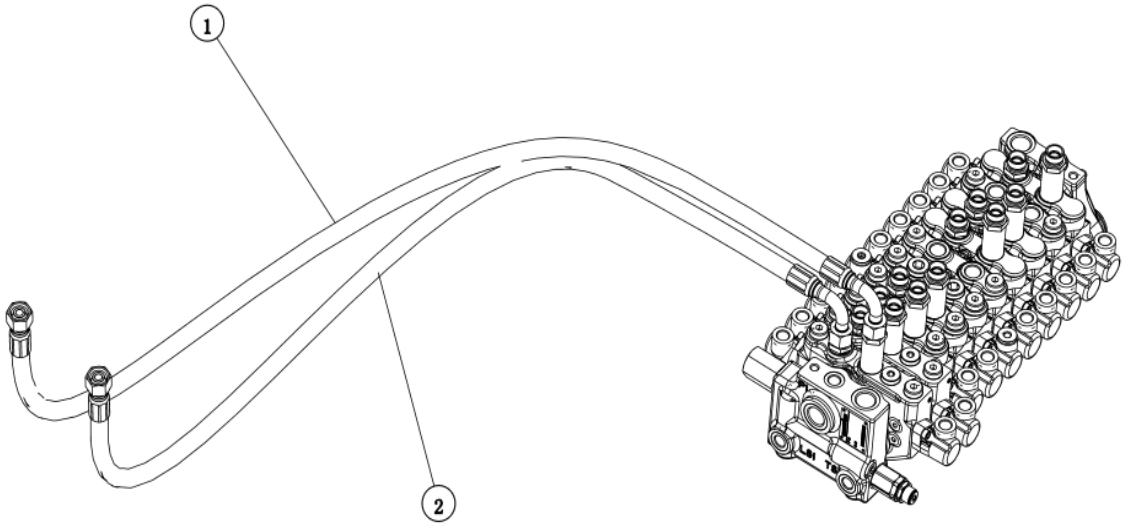

序号 POS	编码 CODE	DESCRIPTION	名称	数量 QTY	备注 remark
1	73050200L352	HOSE ASSEMBLY	胶管总成F431CACF121206-1500-PS-1000CA	1	2-1
2	73050200L353	HOSE ASSEMBLY	胶管总成F431CACF121206-1450-PS-1000CA	1	2-2

上车液压系统（恒立—国际）(ACE0000787)

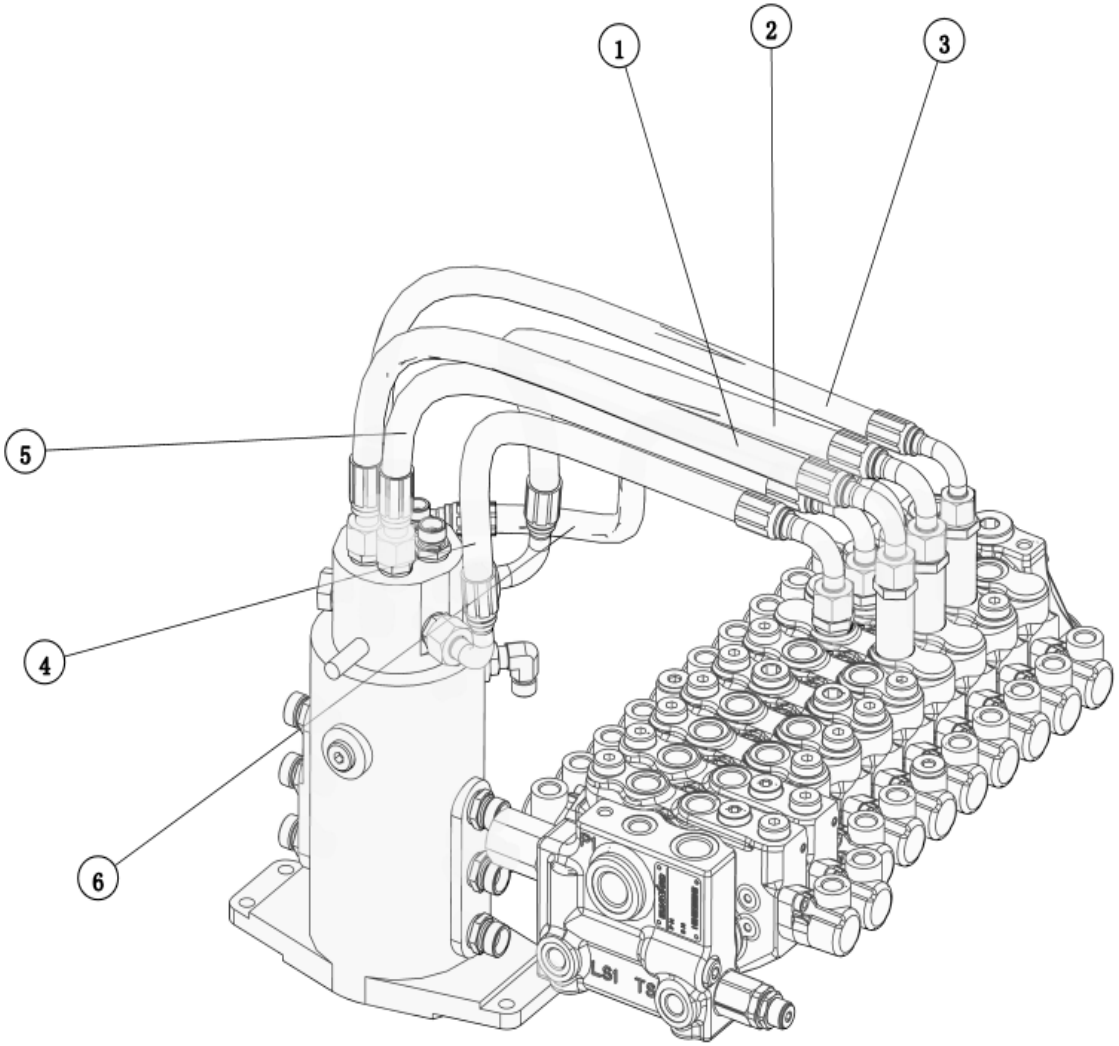

序号 POS	编码 CODE	DESCRIPTION	名称	数量 QTY	备注 remark
1	730502009835	HOSE ASSEMBLY	胶管总成F431CACF121206-500	1	3-1
2	730504007412	HOSE ASSEMBLY	胶管总成F431CFCF121206-480-270°	1	3-2
3	73050200E251	HOSE ASSEMBLY	胶管总成F431CACF101005-530	1	3-3
4	73050400B103	HOSE ASSEMBLY	胶管总成F431CFCF121206-390-180°	1	3-4
5	730502009588	HOSE ASSEMBLY	胶管总成F431CACF121206-420	2	3-5,6-2
6	730504003783	HOSE ASSEMBLY	胶管总成F431CFCF101005-500-270° -PG-500	1	3-6

上车液压系统（恒立—国际）(ACE0000787)

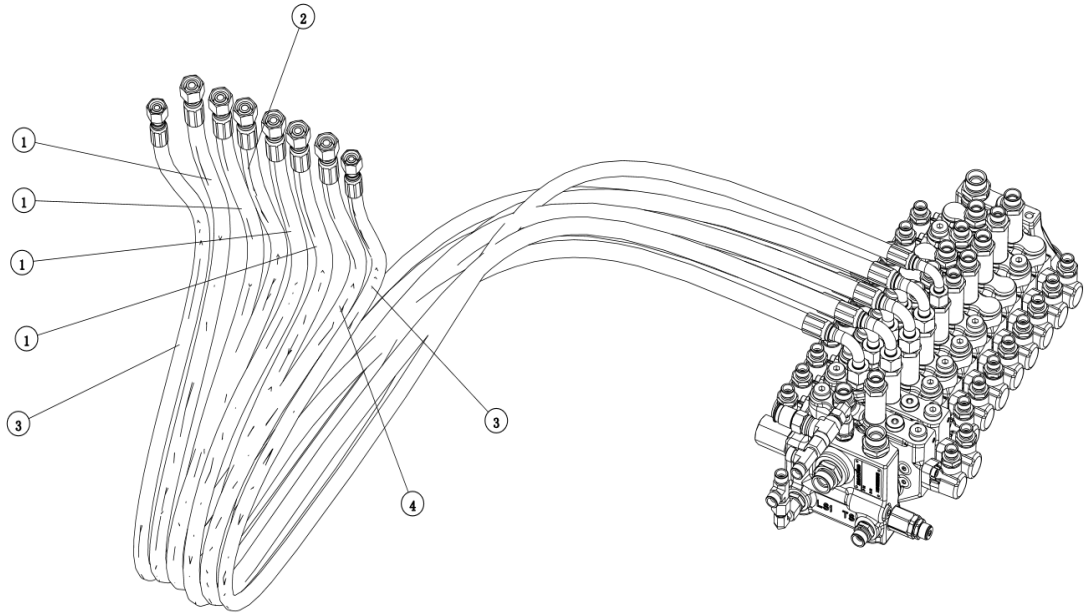

序号 POS	编码 CODE	DESCRIPTION	名称	数量 QTY	备注 remark
1	73050200M381	HOSE ASSEMBLY	胶管总成F431CACF121206-1800-PS-1300CA	1	4-1
2	73050200M382	HOSE ASSEMBLY	胶管总成F431CACF101005-1900-PS-1300CA	2	4-2
3	73050200M384	HOSE ASSEMBLY	胶管总成F431CACF121206-1750-PS-1300CA	1	4-3
4	73050200M383	HOSE ASSEMBLY	胶管总成F431CACF121206-1700-PS-1300CA	4	4-4

上车液压系统（恒立—国际）(ACE0000787)

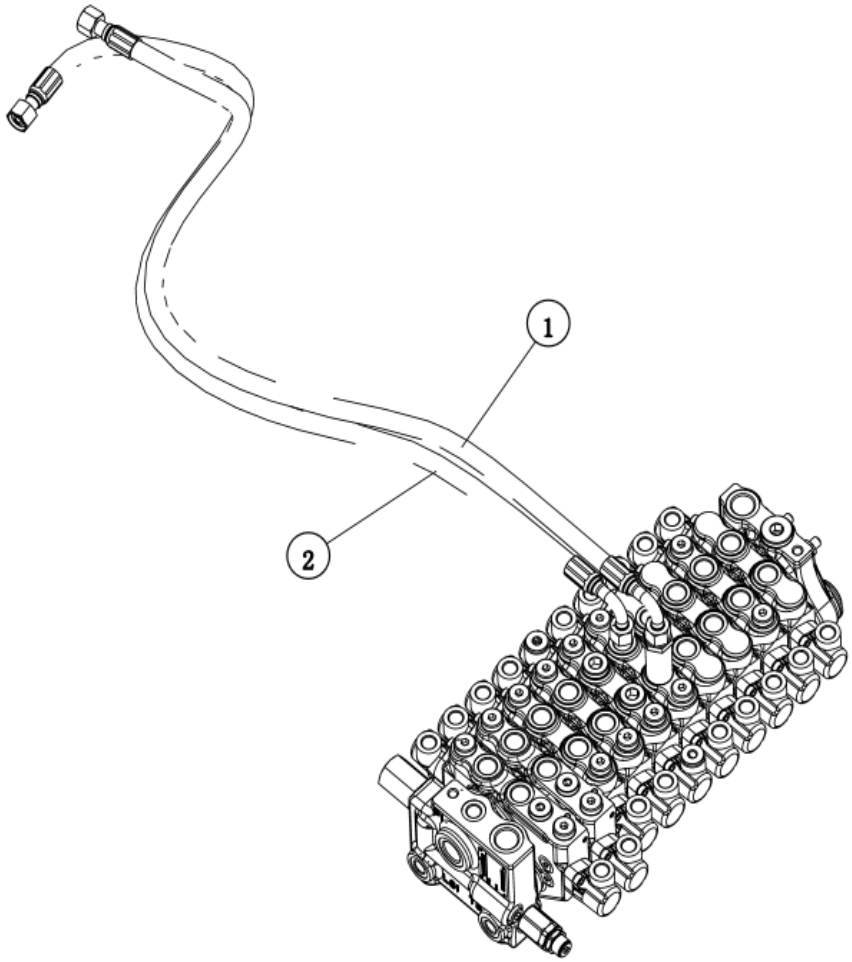

序号 POS	编码 CODE	DESCRIPTION	名称	数量 QTY	备注 remark
1	730502007582	HOSE ASSEMBLY	胶管总成F431CACF101005-1100	1	5-1
2	73050200A813	HOSE ASSEMBLY	胶管总成F431CACF101005-1150	1	5-2

上车液压系统（恒立—国际）(ACE0000787)

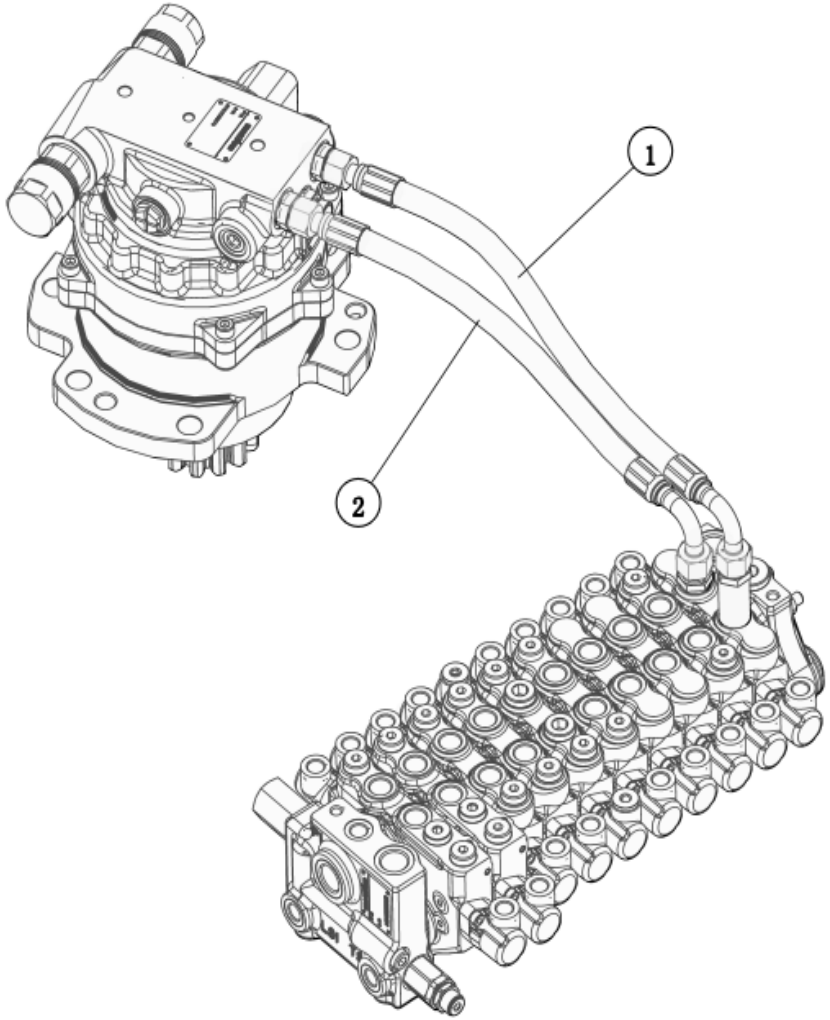

序号 POS	编码 CODE	DESCRIPTION	名称	数量 QTY	备注 remark
1	73050200M034	HOSE ASSEMBLY	胶管总成F431CACF121206-490	1	6-1
2	730502009588	HOSE ASSEMBLY	胶管总成F431CACF121206-420	2	3-5,6-2

上车液压系统（恒立—国际）(ACE0000787)

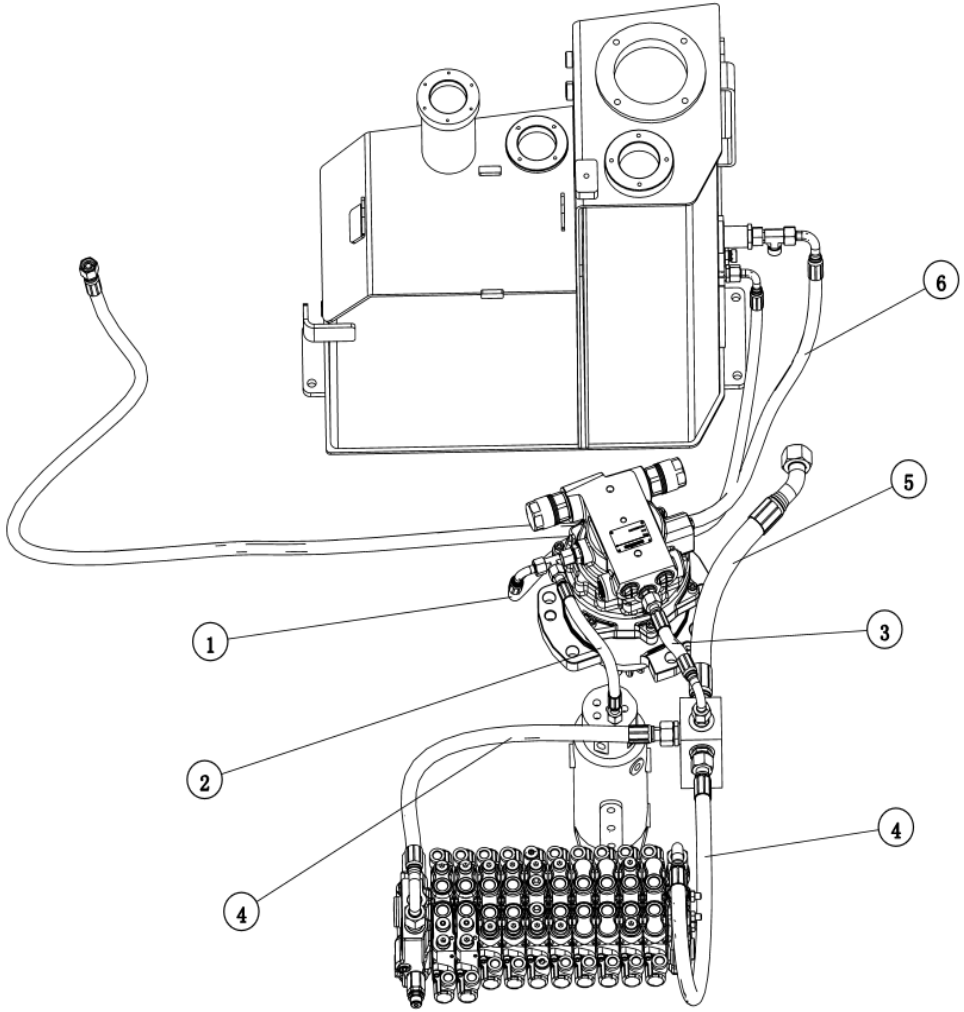

序号 POS	编码 CODE	DESCRIPTION	名称	数量 QTY	备注 remark
1	730504001484	HOSE ASSEMBLY	胶管总成F481CFCF101005-950-90°	1	7-1
2	730501000410	HOSE ASSEMBLY	胶管总成F481CACA101005-270	1	7-2
3	73050200B755	HOSE ASSEMBLY	胶管总成F481CACF121206-200	1	7-3
4	730502000245	HOSE ASSEMBLY	胶管总成F481CACF151508-540F481CACF151508-540	2	7-4,7-4
5	73050200A549	HOSE ASSEMBLY	胶管总成F481CACE222212-370	1	7-5
6	73050200M385	HOSE ASSEMBLY	胶管总成F481CACF121206-2200-PS-1300CA	1	7-6

上车液压系统（恒立—国际）(ACE0000787)

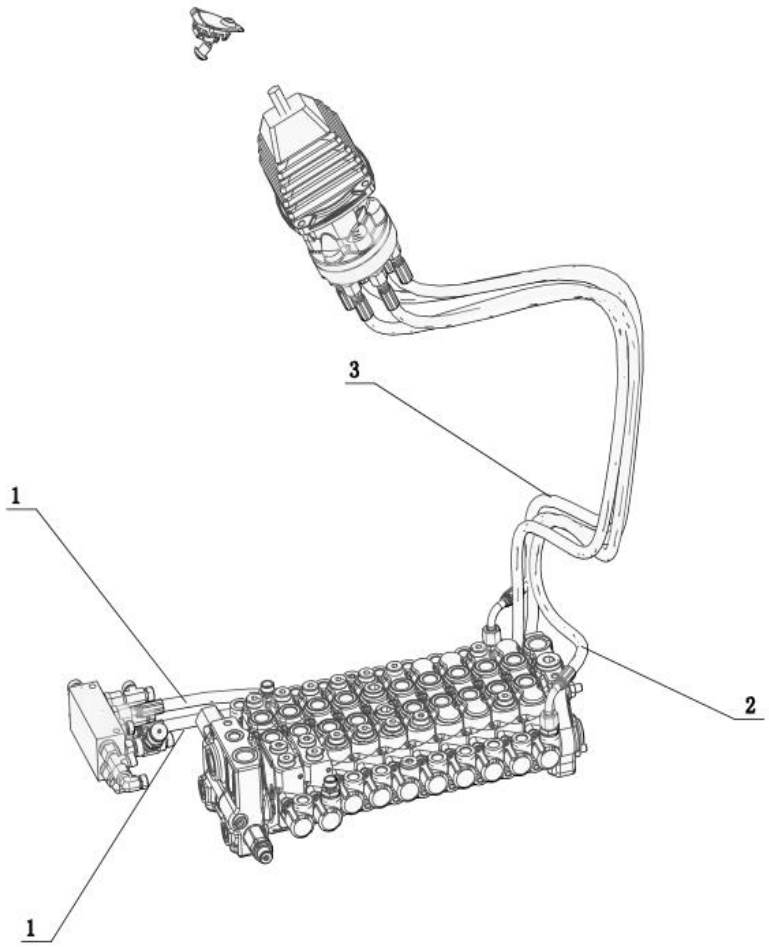

序号 POS	编码 CODE	DESCRIPTION	名称	数量 QTY	备注 remark
1	730501005612	HOSE ASSEMBLY	胶管总成F481CACA080803-1500	2	8-1,8-1
2	73050200A710	HOSE ASSEMBLY	胶管总成F481CACF080803-1150F481CACF080803-1150	1	8-2
3	73050200A486	HOSE ASSEMBLY	胶管总成F481CACF080803-1100F481CACF080803-1100	1	8-3

上车液压系统（恒立—国际）(ACE0000787)

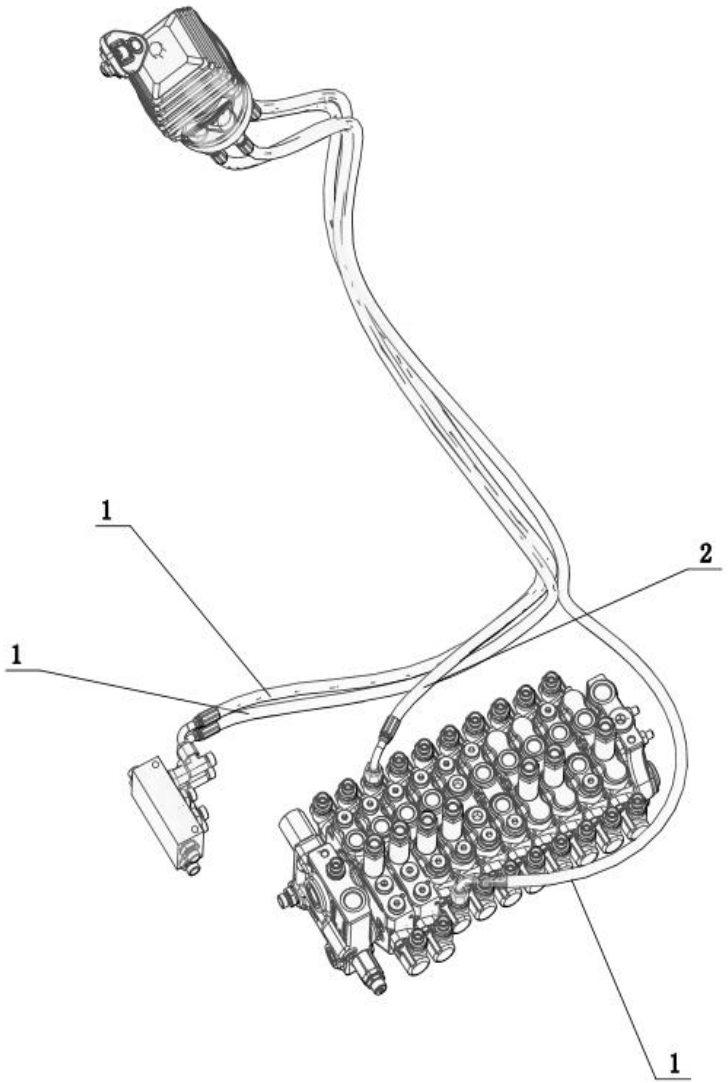

序号 POS	编码 CODE	DESCRIPTION	名称	数量 QTY	备注 remark
1	73050200A220	HOSE ASSEMBLY	胶管总成F481CACF080803-1600	3	9-1,9-1,9-1
2	73050200E256	HOSE ASSEMBLY	胶管总成F481CACF080803-1530	1	9-2

上车液压系统（恒立—国际）(ACE0000787)

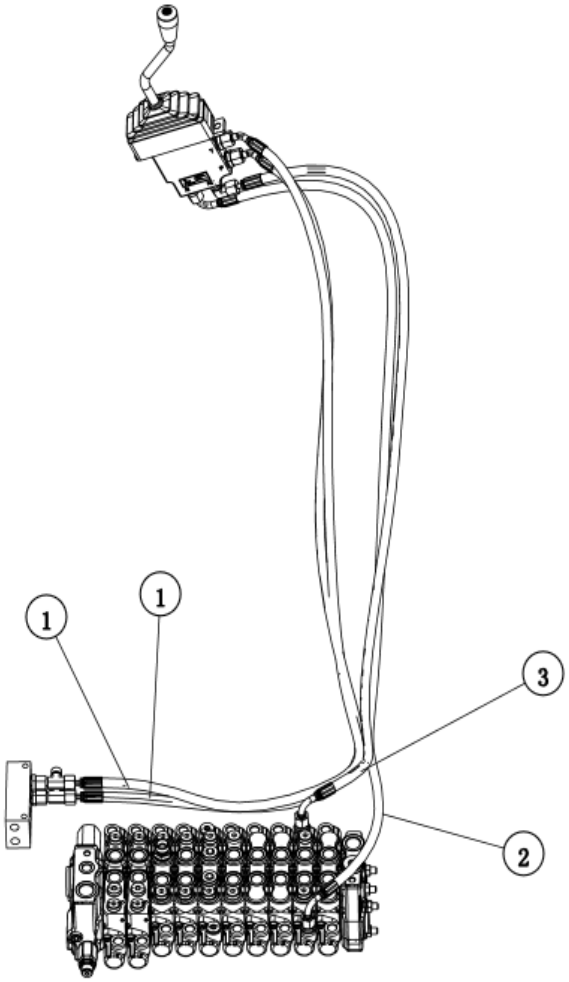

序号 POS	编码 CODE	DESCRIPTION	名称	数量 QTY	备注 remark
1	73050200F210	HOSE ASSEMBLY	胶管总成F481CACE080803-1550	2	10-1,10-1
2	730503001945	HOSE ASSEMBLY	胶管总成F481CFCF080803-1450-0°	1	10-2
3	73050200A443	HOSE ASSEMBLY	胶管总成F481CACF080803-1300	1	10-3

上车液压系统（恒立—国际）(ACE0000787)

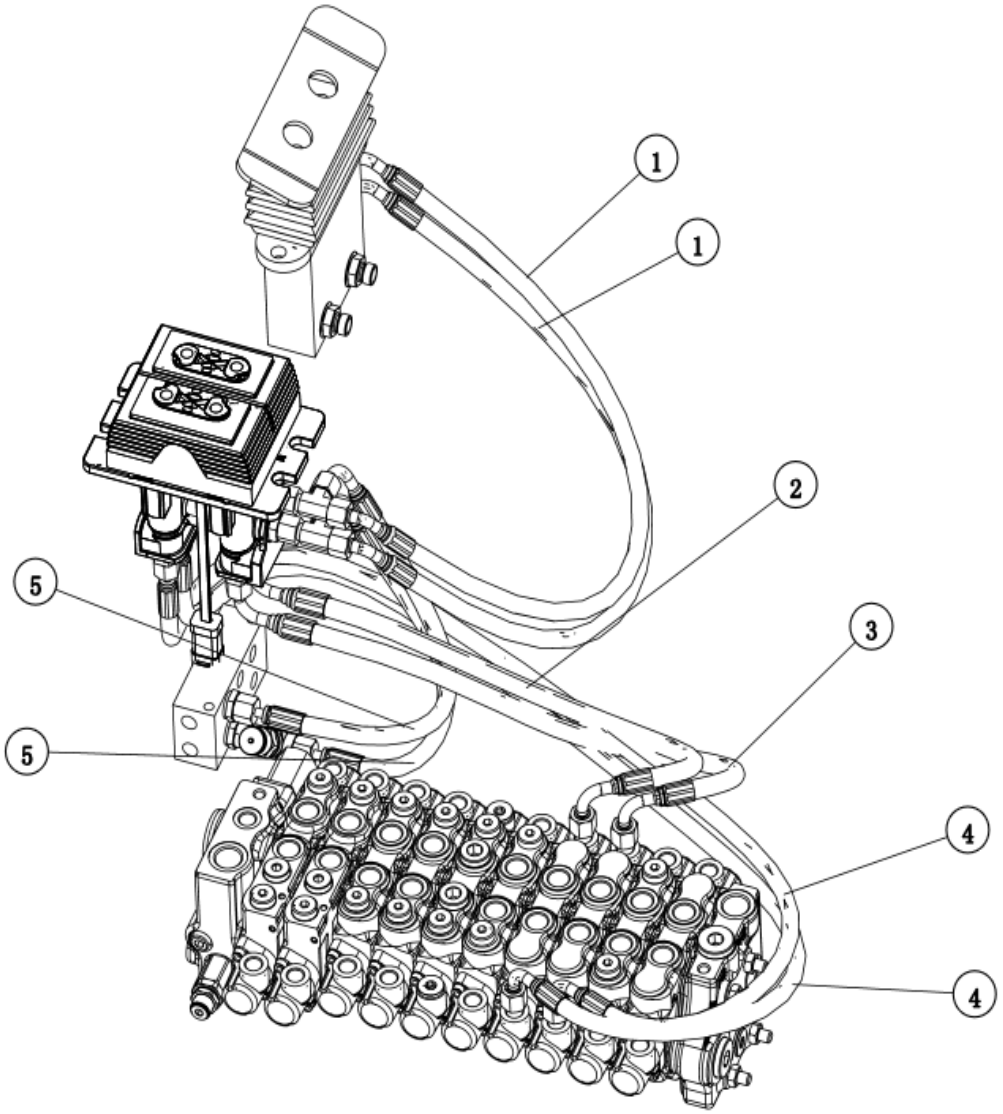

序号 POS	编码 CODE	DESCRIPTION	名称	数量 QTY	备注 remark
1	730504005690	HOSE ASSEMBLY	胶管总成F481CECF080803-600-315°	2	11-1,11-1
2	73050400A660	HOSE ASSEMBLY	胶管总成F481CFCF080803-500-210°	1	11-2
3	73050400A655	HOSE ASSEMBLY	胶管总成F481CFCF080803-550-210°	1	11-3
4	73050200A219	HOSE ASSEMBLY	胶管总成F481CACF080803-1200	3	11-4,11-4
5	73050200A221	HOSE ASSEMBLY	胶管总成F481CACF080803-300	4	11-5,11-5

上车液压系统（恒立—国际）(ACE0000787)

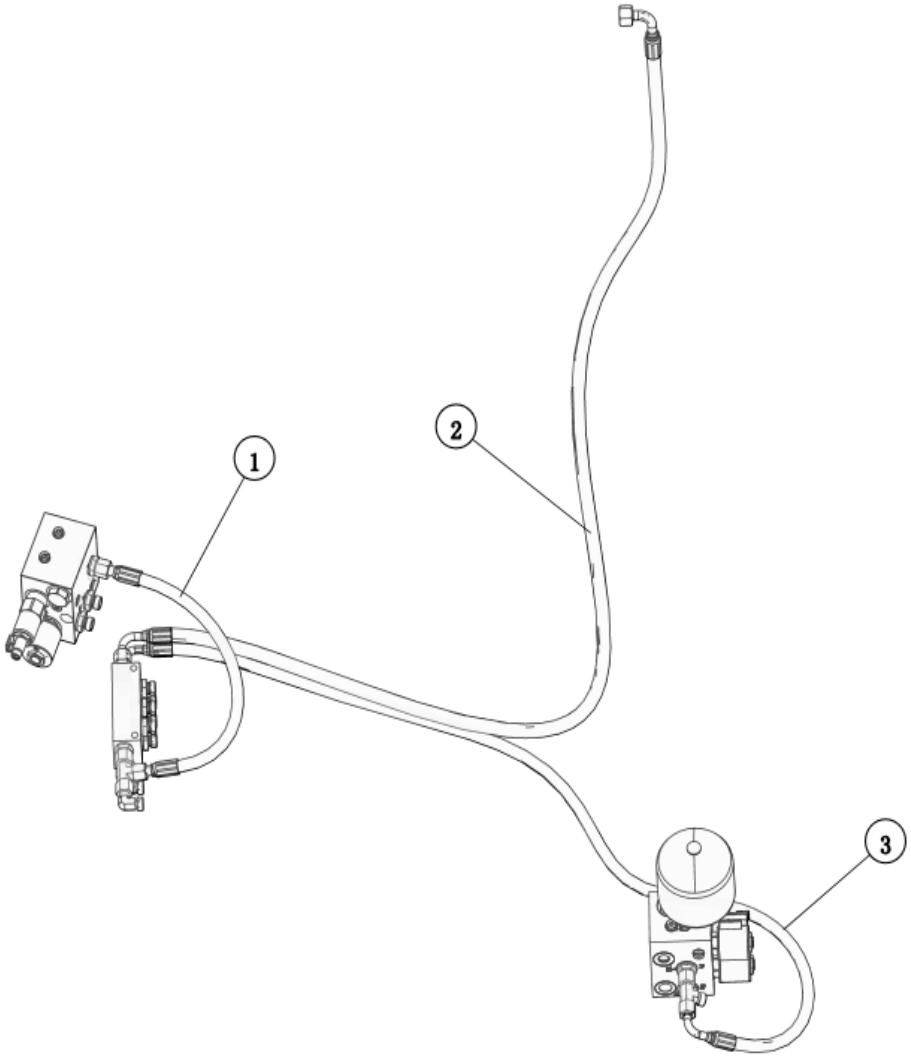

序号 POS	编码 CODE	DESCRIPTION	名称	数量 QTY	备注 remark
1	730501001020	HOSE ASSEMBLY	胶管总成F481CACA080804-450	1	12-1
2	730501002301	HOSE ASSEMBLY	胶管总成F481CFCF101005-1450-180°	1	12-2
3	730504008668	HOSE ASSEMBLY	胶管总成F481CFCF080804-1150-45°	1	12-3

上车液压系统（恒立—国际）(ACE0000787)

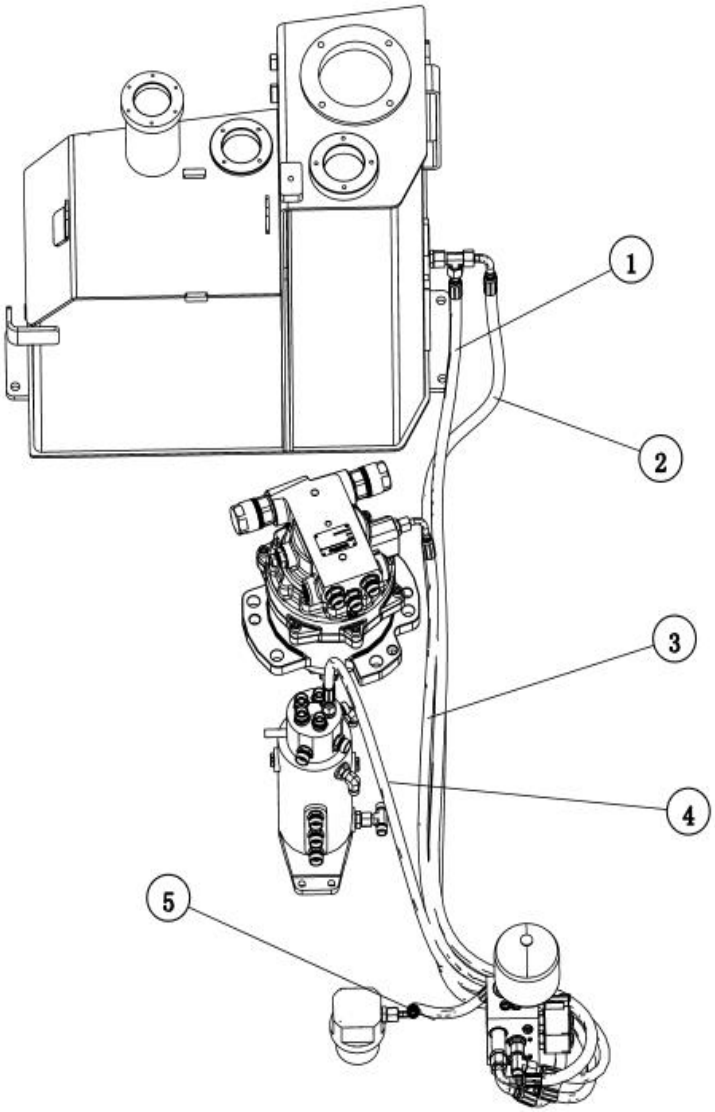

序号 POS	编码 CODE	DESCRIPTION	名称	数量 QTY	备注 remark
1	730502002752	HOSE ASSEMBLY	胶管总成F481CACF101005-1450-PG1450	1	13-1
2	730504001577	HOSE ASSEMBLY	胶管总成F481CFCF101005-1500-90°	1	13-2
3	73050200A215	HOSE ASSEMBLY	胶管总成F481CACF080803-1000	1	13-3
4	730502001181	HOSE ASSEMBLY	胶管总成F481CACF080804-1000	1	13-4
5	73050200A697	HOSE ASSEMBLY	胶管总成F431CACF080804-320	1	13-5

上车液压系统（恒立—国际）(ACE0000787)

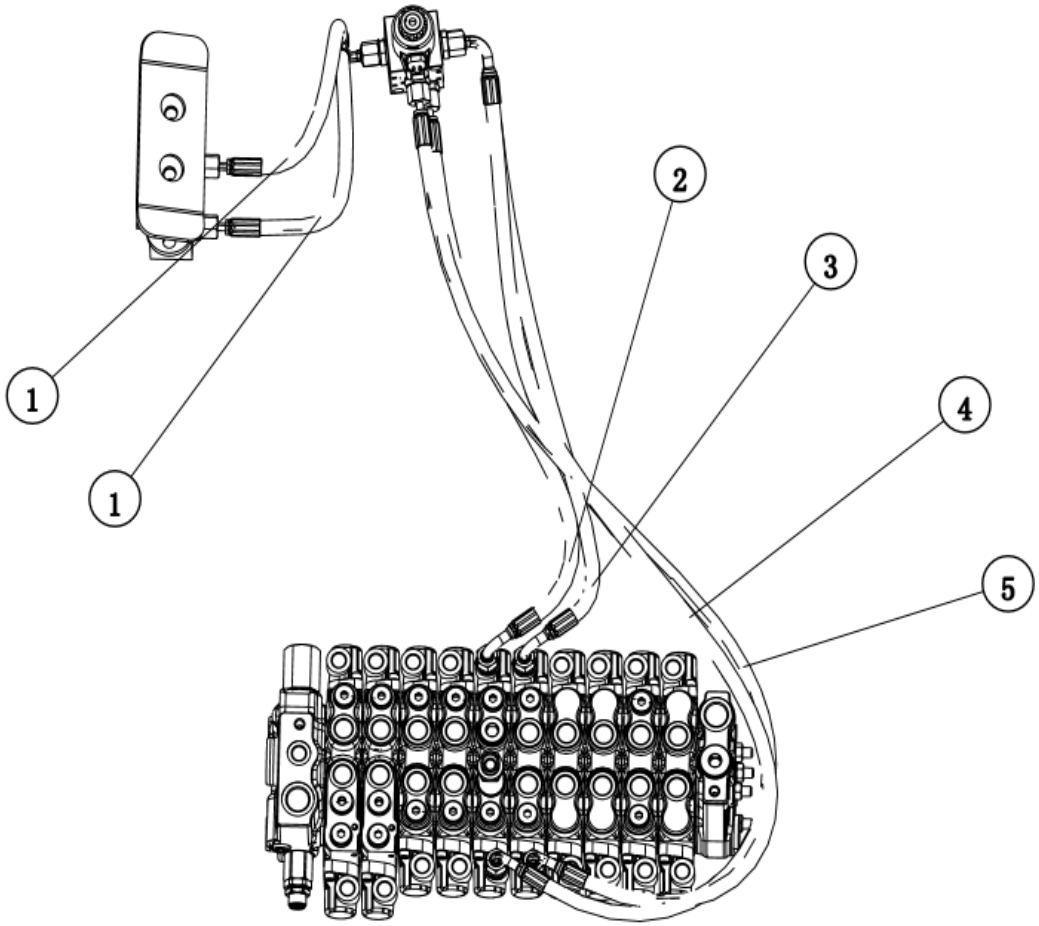

序号 POS	编码 CODE	DESCRIPTION	名称	数量 QTY	备注 remark
1	73050200A221	HOSE ASSEMBLY	胶管总成F481CACF080803-300	2	14-1
2	73050200A383	HOSE ASSEMBLY	胶管总成F481CACF080803-600	1	14-2
3	73050400A654	HOSE ASSEMBLY	胶管总成F481CFCF080803-620-270°	1	14-3
4	730504004397	HOSE ASSEMBLY	胶管总成F481CFCF080803-1200-270°	1	14-4
5	73050200A219	HOSE ASSEMBLY	胶管总成F481CACF080803-1200	1	14-5

上车液压系统（恒立—国际）(ACE0000787)

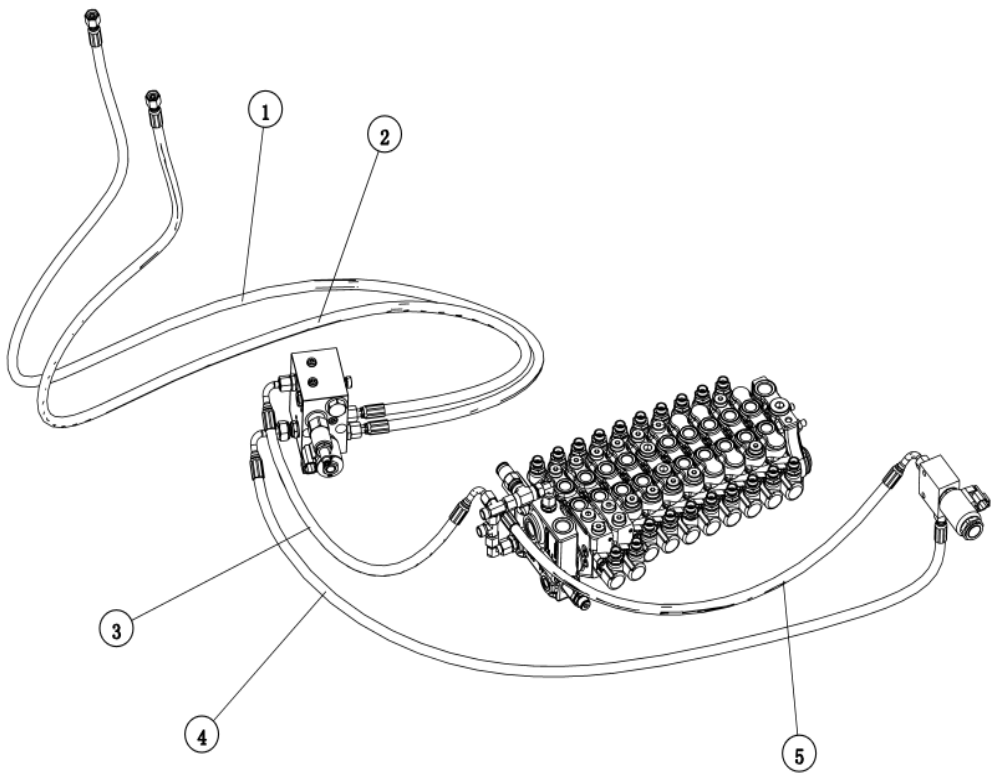

序号 POS	编码 CODE	DESCRIPTION	名称	数量 QTY	备注 remark
1	73050100A402	HOSE ASSEMBLY	胶管总成F431CACA080804-1750-PS-1750	1	15-1
2	73050100A374	HOSE ASSEMBLY	胶管总成F431CACA080804-1650-PS-1650	1	15-2
3	730504000348	HOSE ASSEMBLY	胶管总成F431CFCF080804-500-180°	1	15-3
4	73050200E255	HOSE ASSEMBLY	胶管总成F431CACF080804-1230	1	15-4
5	73050400A653	HOSE ASSEMBLY	胶管总成F431CFCF080804-750-90°	1	15-5

上车液压系统（恒立—国际）(ACE0000787)

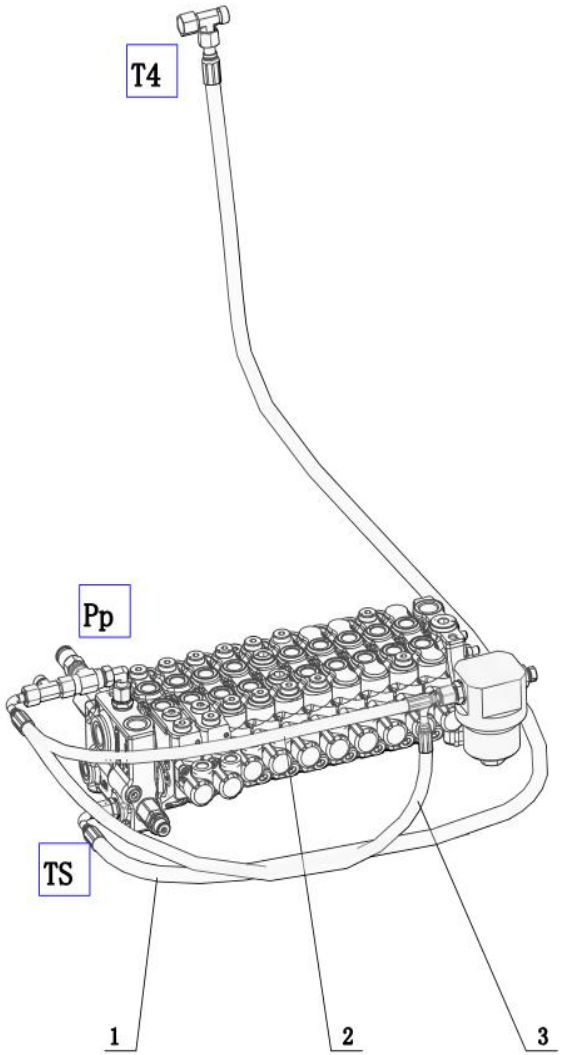

序号 POS	编码 CODE	DESCRIPTION	名称	数量 QTY	备注 remark
1	730502001731	HOSE ASSEMBLY	胶管总成F481CACF101005-1800	1	16-1
2	730502003672	HOSE ASSEMBLY	胶管总成F431CACF080804-550	1	16-2
3	730504009405	HOSE ASSEMBLY	胶管总成F431CFCF080804-650-90°	1	16-3

先导选择阀接头安装(ACE0000125)

PILOT SELECT VALVE CONNECTOR

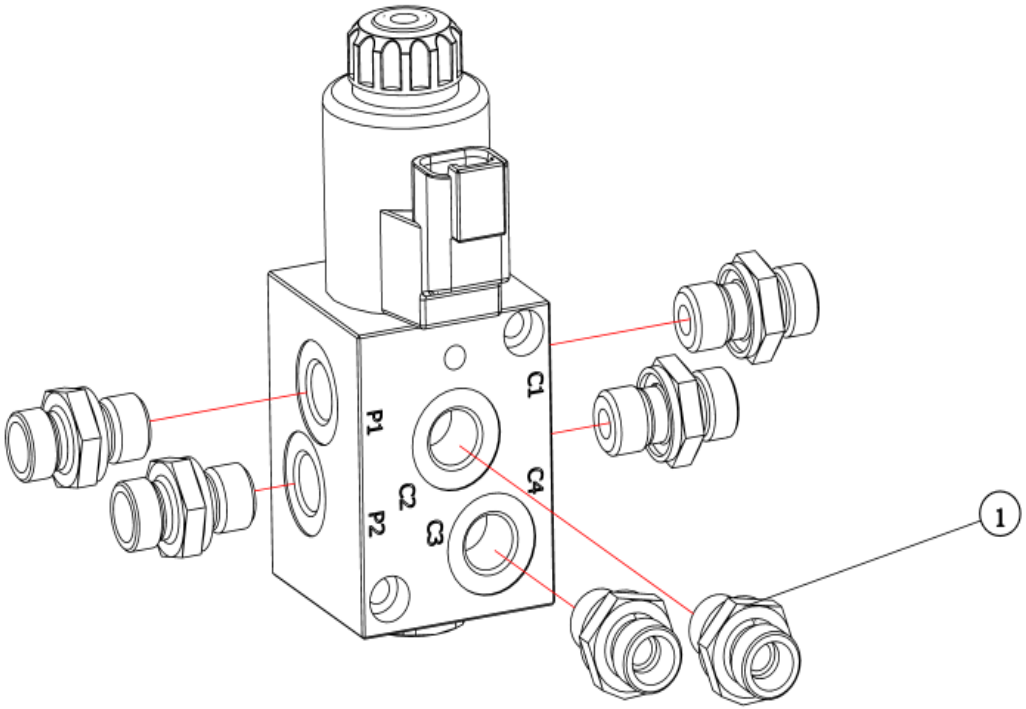

序号 POS	编码 CODE	DESCRIPTION	名称	数量 QTY	备注 remark
1	730101000079	END STRAIGHT COUPLING	端直通接头GE08LR1/4ED0MDA3C	6	1-1

复合回油块接头安装(ACE0000119)

OIL RETURN BLOCK CONNECTOR

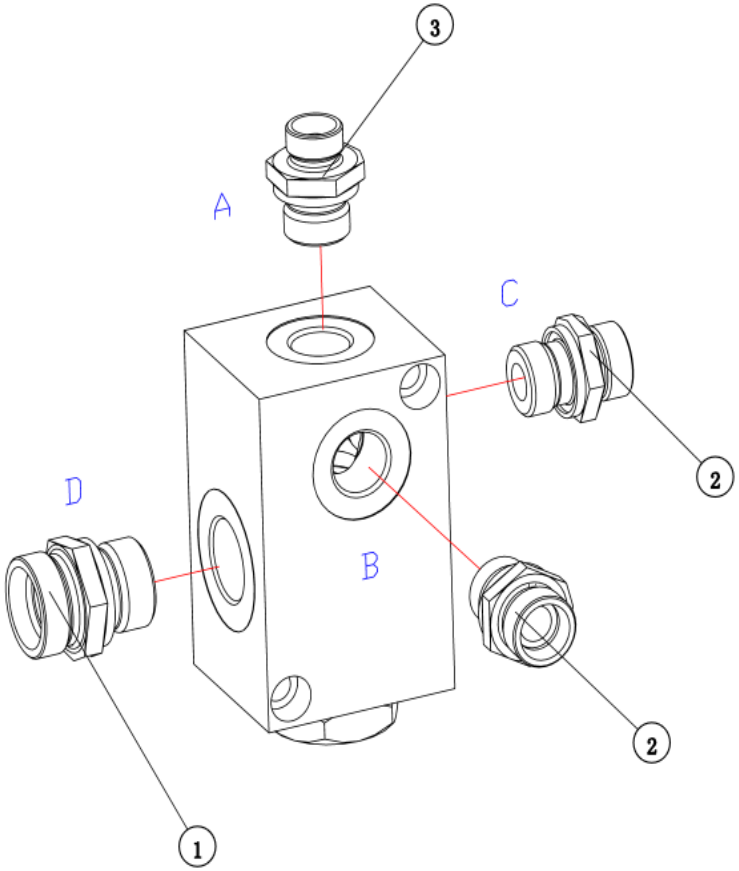

序号 POS	编码 CODE	DESCRIPTION	名称	数量 QTY	备注 remark
1	730101000100	END STRAIGHT COUPLING	端直通接头GE22LR3-4EDOMDA3C	1	1-1
2	730101000083	END STRAIGHT COUPLING	端直通接头GE15LR1/2EDOMDA3C	2	1-2,1-2
3	730101000105	END STRAIGHT COUPLING	端直通接头GE12LR1|2EDOMDA3C	1	1-3

右手柄接头安装(ACE0000132)

RIGHT PILOT HANDLE CONNECTOR INSTALLATION

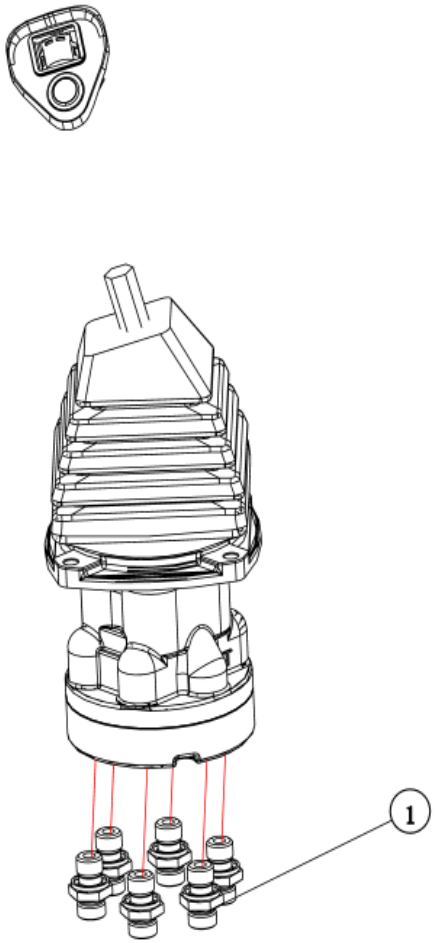

序号 POS	编码 CODE	DESCRIPTION	名称	数量 QTY	备注 remark
1	730101000079	END STRAIGHT COUPLING	端直通接头GE08LR1/4EDOMDA3C	6	

集流块接头安装(ACE0000786)

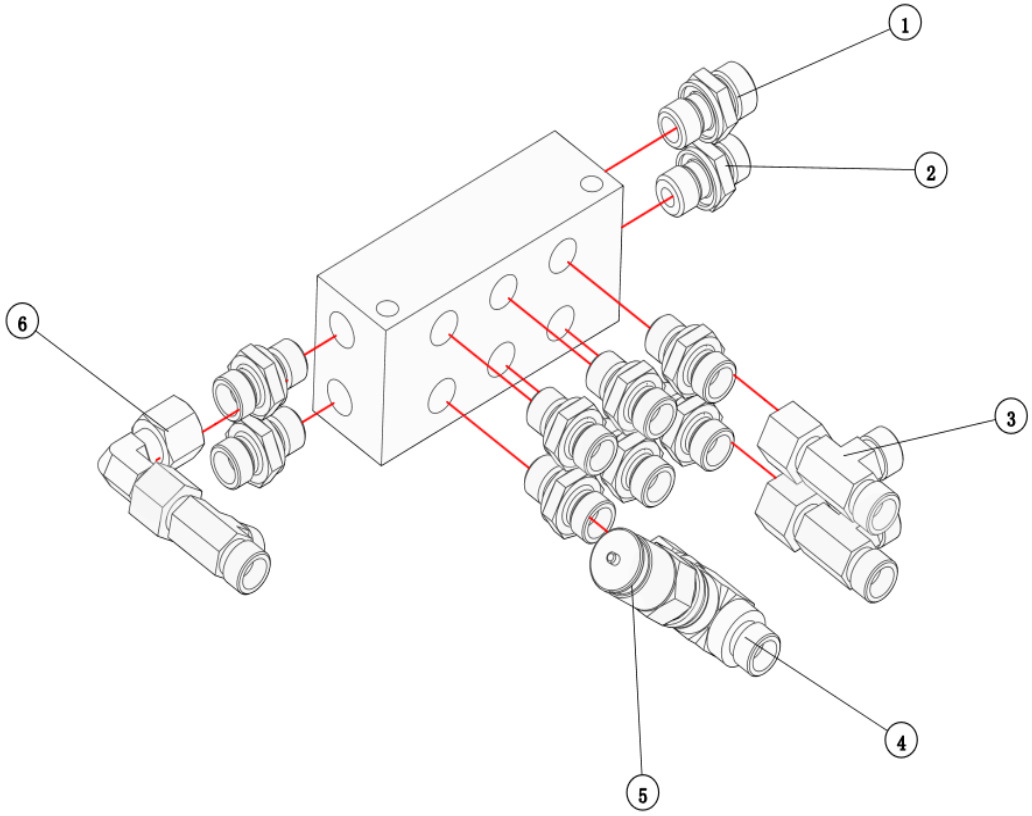

序号 POS	编码 CODE	DESCRIPTION	名称	数量 QTY	备注 remark
1	730101000010	END STRAIGHT COUPLING	端直通接头GE10LR1-4EDOMDA3C	1	1-1
2	730101000079	END STRAIGHT COUPLING	端直通接头GE08LR1/4EDOMDA3C	9	1-2
3	730104000020	TEE JOINT	直路三通组合接头EL08LOMDA3C	3	1-3
4	730104000039	CONNECT	测压三通接头JT-ELCY08LOMDA3C	1	1-4
5	730101000169	CONNECT	外螺纹测压点接头EMA3/M12X1.5A3CX	1	1-5
6	730102000010	CONNECT	直角组合接头EW08LOMDA3C	2	1-6

先导油源块接头安装(ACE0000782)

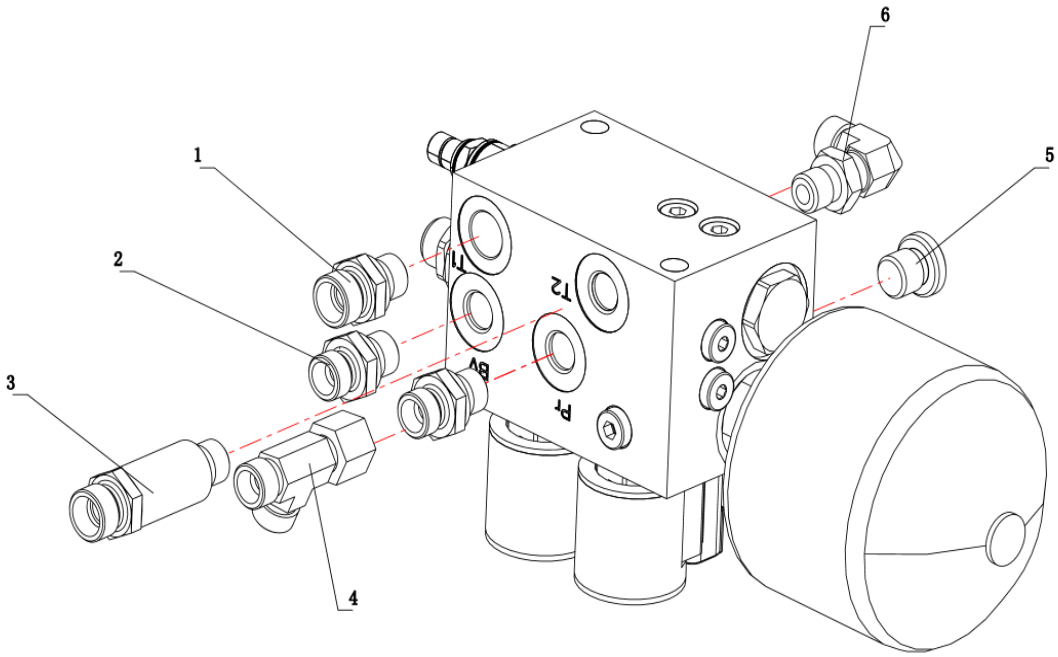

序号 POS	编码 CODE	DESCRIPTION	名称	数量 QTY	备注 remark
1	730101000010	END STRAIGHT COUPLING	端直通接头GE10LR1-4EDOMDA3C	1	
2	730101000079	END STRAIGHT COUPLING	端直通接头GE08LR1-4EDOMDA3C	2	
3	730101001182	END STRAIGHT COUPLING	端直通接头GE10LR1-4EDOMDA3C-30	1	
4	730104000020	CONNECT	直路三通组合接头EL08LOMDA3C	1	
5	739806000001	PLUG, SOCKET	内六角油口堵头VSTI1-4EDA3C	1	
6	730102000014	CONNECT	端直角可调向接头WEE08LR1-4OMDA3C	1	

双联脚踏阀接头安装(ACE0000122)

DUPLEX FOOT JOINT INSTALLATION

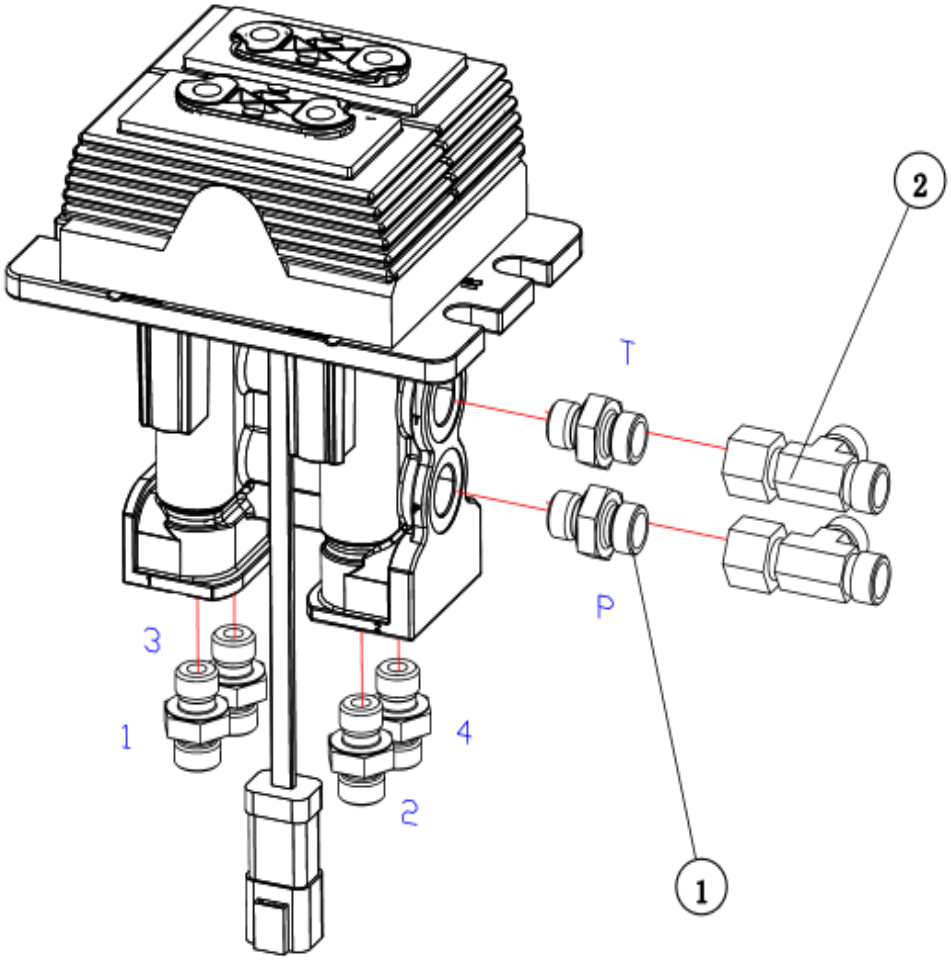

序号 POS	编码 CODE	DESCRIPTION	名称	数量 QTY	备注 remark
1	730101000080	END STRAIGHT COUPLING	端直通接头GE008LR1-40MDA3C	6	1-1
2	730104000020	TEE JOINT	直路三通组合接头EL08L0MDA3C	2	1-2

液压快换锁控制阀接头安装(ACE0000784)

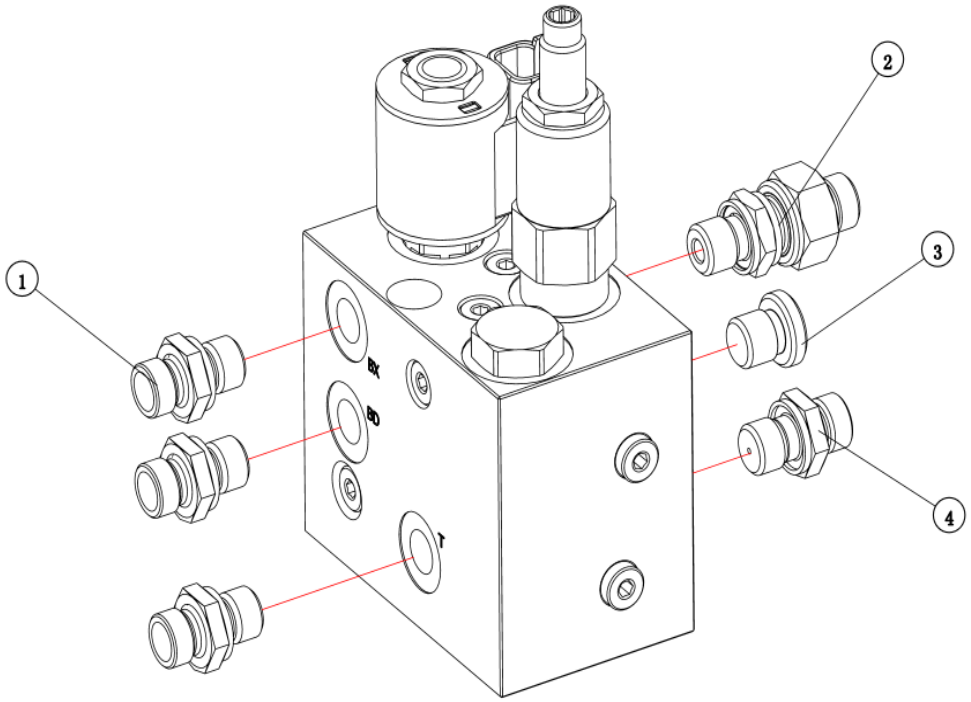

序号 POS	编码 CODE	DESCRIPTION	名称	数量 QTY	备注 remark
1	730101000079	END STRAIGHT COUPLING	端直通接头GE08LR1/4ED0MDA3C	3	1-1
2	730301000200	HOSE ASSEMBLY	单向阀840100181(SDXFV-1CB-14-04WD)	1	1-2
3	739806000001	PLUG, SOCKET	内六角油口堵头VSTI1/4EDA3C	1	1-3
4	730101002241	END STRAIGHT COUPLING	端直通节流接头GE08LR1/4ED0MDA3C/φ1.2	1	1-4

推土手柄接头安装(ACE0000124)

PUSH THE MAP VALVE CONNECTOR

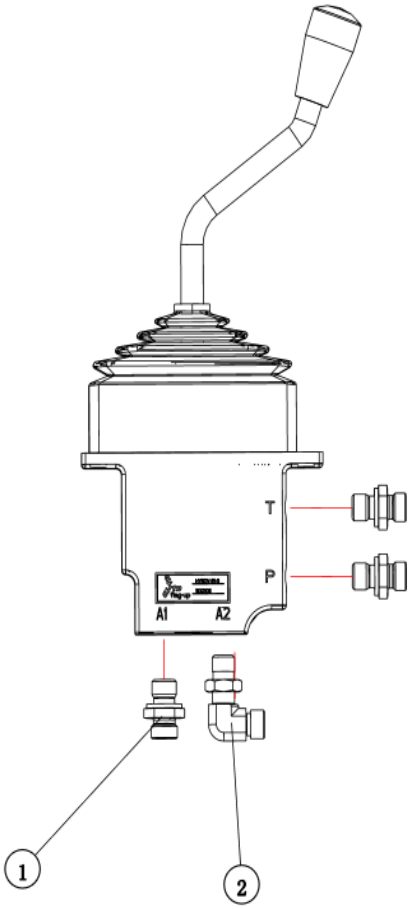

序号 POS	编码 CODE	DESCRIPTION	名称	数量 QTY	备注 remark
1	730101000079	END STRAIGHT COUPLING	端直通接头GE08LR1/4ED0MDA3C	3	1-1
2	730102000014	CONNECT	端直角可调向接头WEE08LR1/4OMDA3C	1	1-2

散热器接头安装(ACE0000130)

RADIATOR CONNECTOR

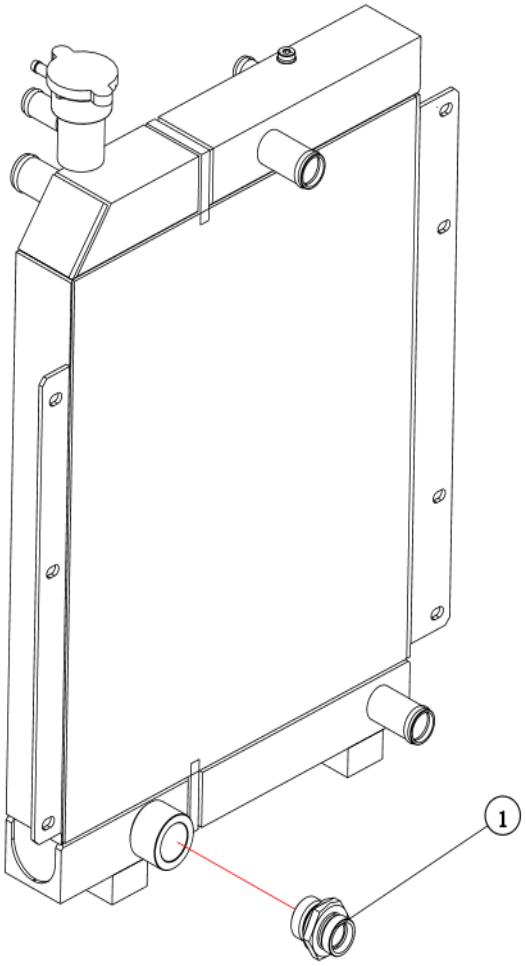

序号 POS	编码 CODE	DESCRIPTION	名称	数量 QTY	备注 remark
1	730101000100	END STRAIGHT COUPLING	端直通接头GE22LR3-4EDOMDA3C	1	

液压快换锁常闭电磁阀接头安装(ACE0000783)

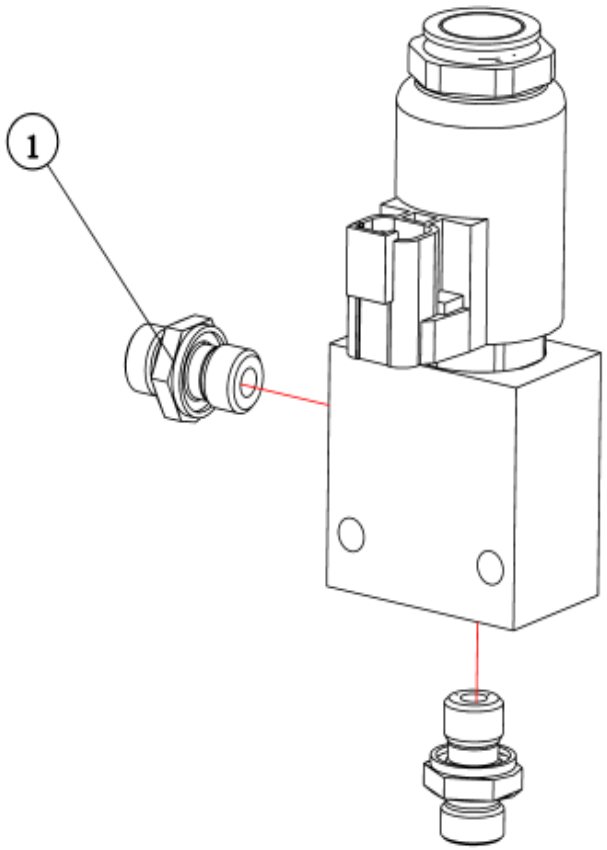

序号 POS	编码 CODE	DESCRIPTION	名称	数量 QTY	备注 remark
1	730101000079	END STRAIGHT COUPLING	端直通接头GE08LR1/4ED0MDA3C	2	1-1

回转马达接头安装(ACE0000118)

SLEWING MOTOR CONNECTOR

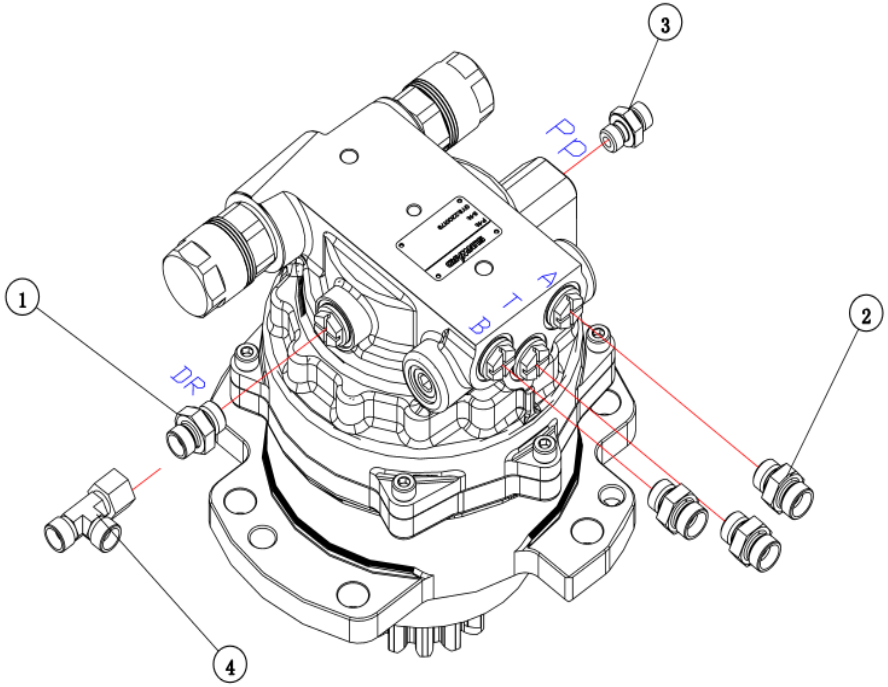

序号 POS	编码 CODE	DESCRIPTION	名称	数量 QTY	备注 remark
1	730101000066	END STRAIGHT COUPLING	端直通接头GE010LR3-80MDA3C	1	1-1
2	730101000113	MAL STUD FITTING	端直通接头GE012LR3-80MDA3C	3	1-2
3	730101000080	END STRAIGHT COUPLING	端直通接头GE008LR1-40MDA3C	1	1-3
4	730104000023	TEE JOINT	直路三通组合接头EL10L0MDA3C	1	1-4

主阀液压接头安装（国际配置选用）(ACE0000781)

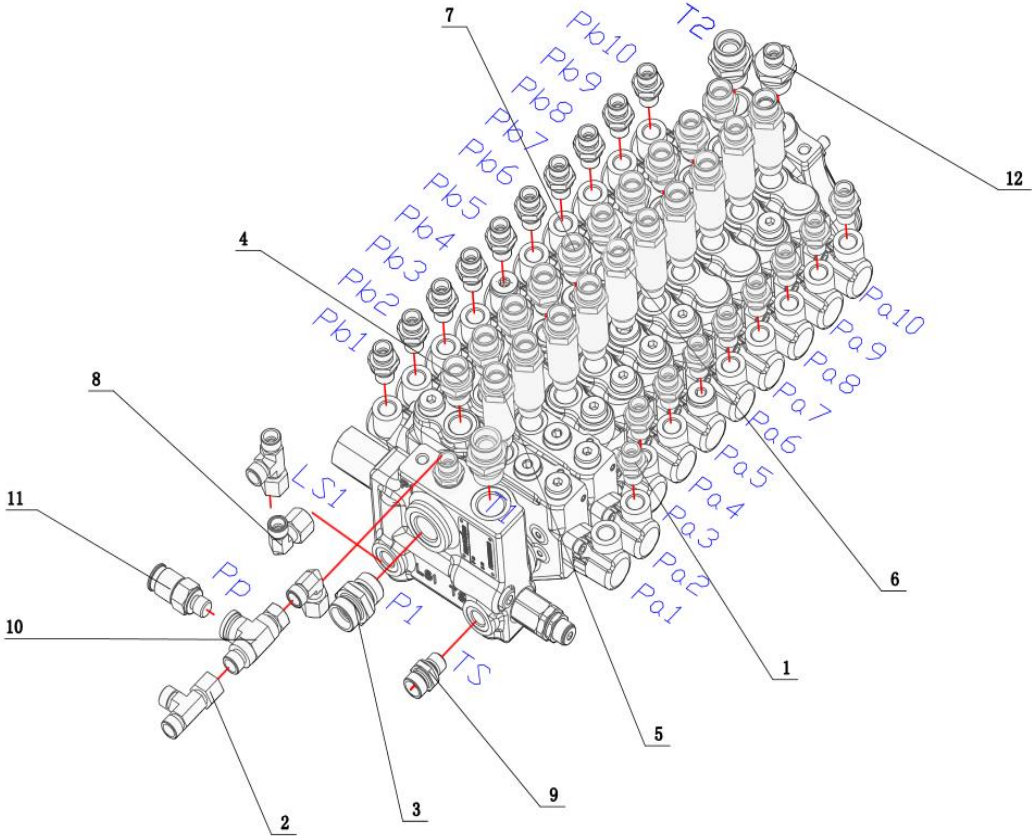

序号 POS	编码 CODE	DESCRIPTION	名称	数量 QTY	备注 remark
1	730101000079	END STRAIGHT COUPLING	端直通接头GE08LR1/4EDOMDA3C	22	1-1
2	730104000020	TEE JOINT	直路三通组合接头EL08LOMDA3C	2	1-2
3	730101000083	END STRAIGHT COUPLING	端直通接头GE15LR1/2EDOMDA3C	3	1-3
4	730101000087	END STRAIGHT COUPLING	端直通接头GE12LR3-8EDOMDA3C	7	1-4
5	730101001811	HOSE ASSEMBLY	端直通接头GE12LR3-8EDOMDA3C-35	7	1-5
6	730101000619	END STRAIGHT COUPLING	端直通接头GE10LR3-8EDOMDA3C-40	3	1-6
7	730101000160	END STRAIGHT COUPLING	端直通接头GE10LR3-8EDOMDA3C	3	1-7
8	730102000010	CONNECT	直角组合接头EW08LOMDA3C	2	1-8
9	730101000010	END STRAIGHT COUPLING	端直通接头GE10LR1-4EDOMDA3C	1	1-9
10	730104000039	CONNECT	测压三通接头JT-ELCY08LOMDA3C	1	1-10
11	730101000169	CONNECT	外螺纹测压点接头EMA3/M12X1.5A3CX	1	1-11

电比例减压阀接头安装(ACE0000128)

QUADRUPL ELECTRIC PROPORTIONAL REDUCINGVAVLE

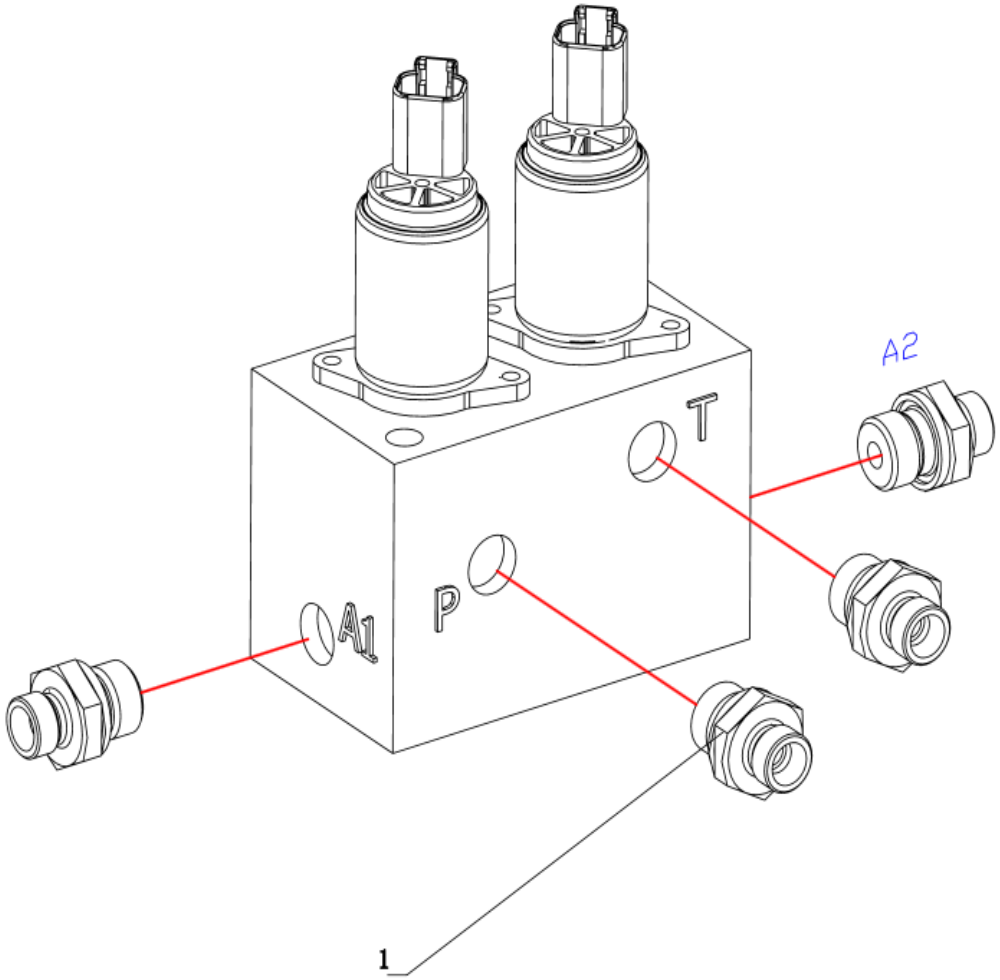

序号 POS	编码 CODE	DESCRIPTION	名称	数量 QTY	备注 remark
1	730101000081	END STRAIGHT COUPLING	端直通接头GE08LR3/8EDOMDA3C	4	

液压油箱接头安装(ACE0000789)

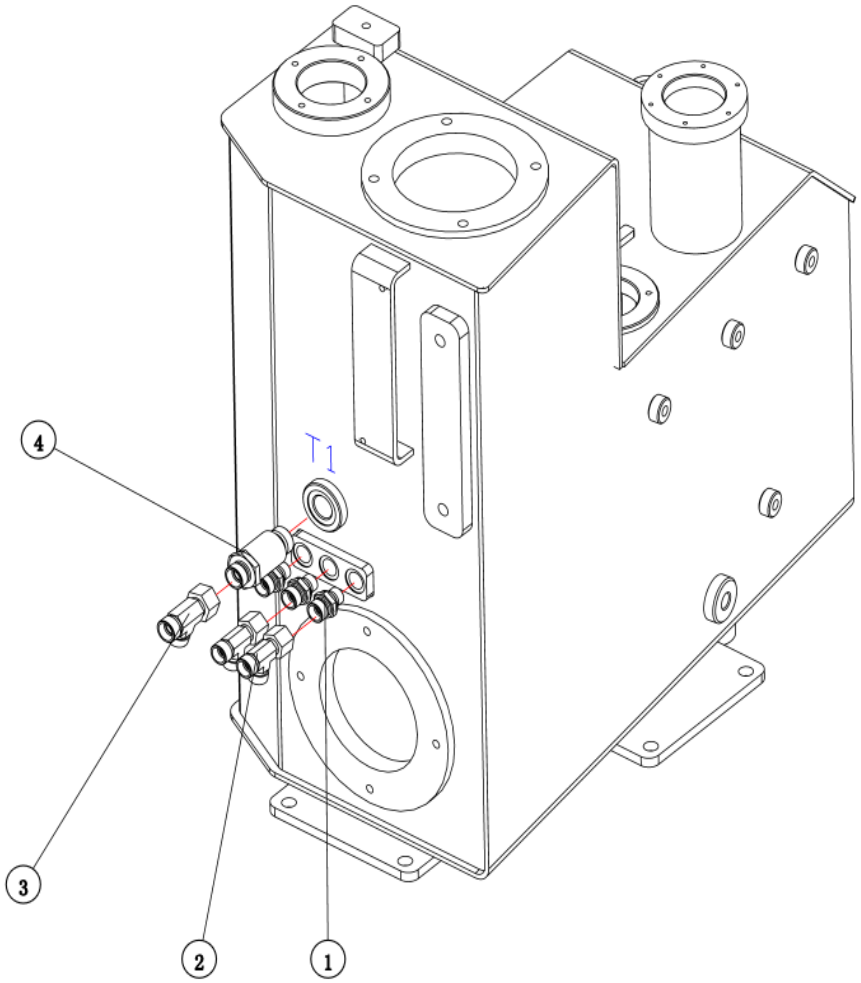

序号 POS	编码 CODE	DESCRIPTION	名称	数量 QTY	备注 remark
1	730101000010	END STRAIGHT COUPLING	端直通接头GE10LR1-4EDOMDA3C	3	1-1
2	730104000023	TEE JOINT	直路三通组合接头EL10LOMDA3C	2	1-2
3	730104000025	BUILT-UP JOINT, THREE-WAY	直路三通组合接头EL12LOMDA3C	1	1-3
4	730101000118	MAL STUD FITTING	端直通接头GE12LR1/2EDOMDA3C/30	1	1-4

主泵液压接头安装(ACE0000779)

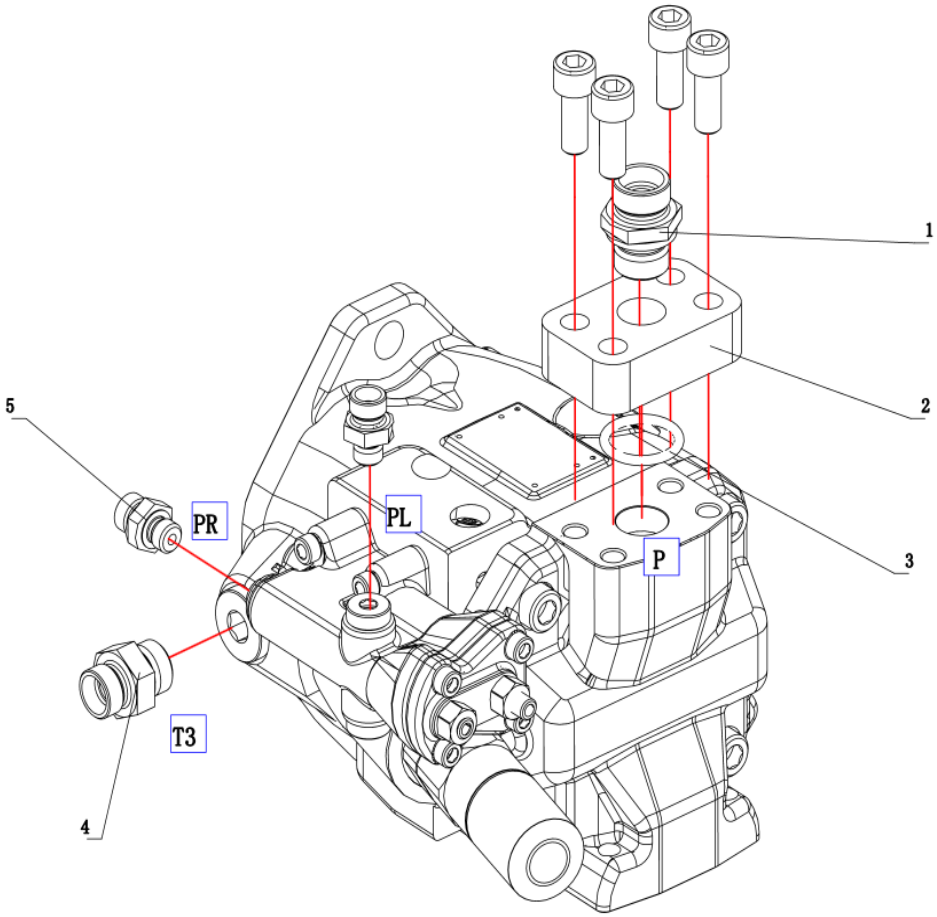

序号 POS	编码 CODE	DESCRIPTION	名称	数量 QTY	备注 remark
1	730101000083	END STRAIGHT COUPLING	端直通接头GE15LR1/2EDOMDA3C	1	1-1
2	ACE0000788.1	EXCESSIVE BLOCK	主泵出油过渡块	1	1-2
3	730603000128	O-RING	O形圈24.99X3.53-NBR-A90 AS 568(P)	1	1-3
4	730101000137	MAL STUD FITTING	端直通接头GE12L3/4UNFOMDA3C	1	1-4
5	730101000213	MAL STUD FITTING	端直通接头GE08L7/16UNFOMDA3C	2	1-5

单联脚踏阀接头安装(ACE0000123)

SINGLE FOOT VALVE CONNECTOR

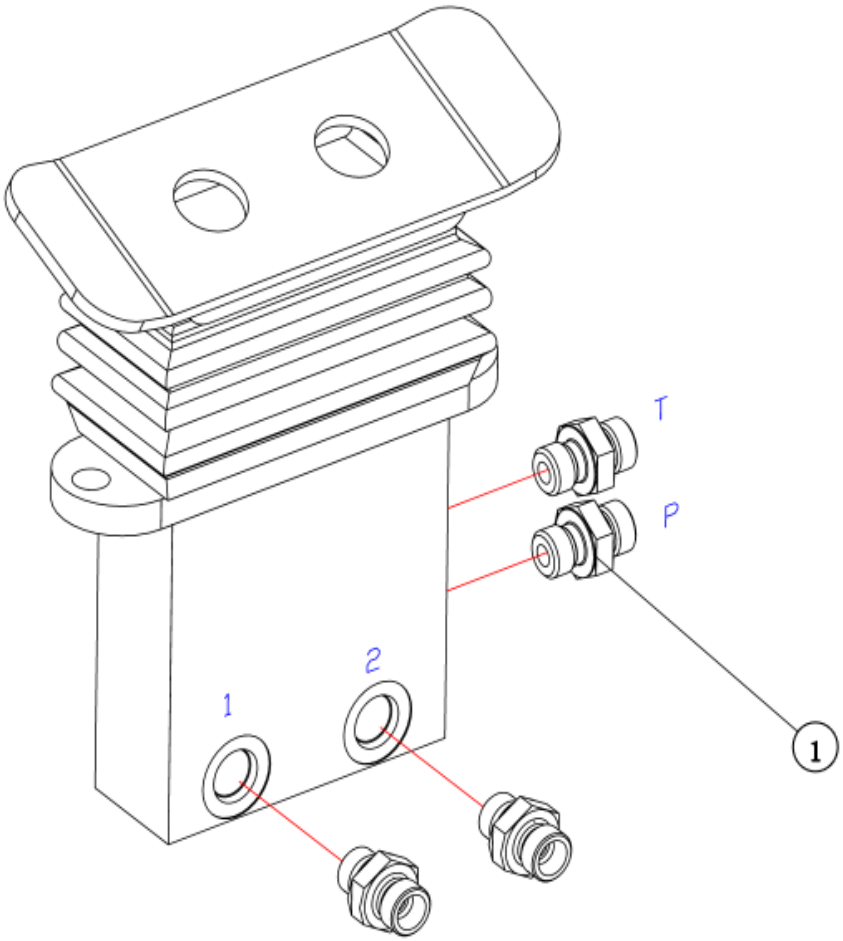

序号 POS	编码 CODE	DESCRIPTION	名称	数量 QTY	备注 remark
1	730101000080	END STRAIGHT COUPLING	端直通接头GE008LR1-40MDA3C	4	1-1

先导过滤器接头安装(ACE0000785)

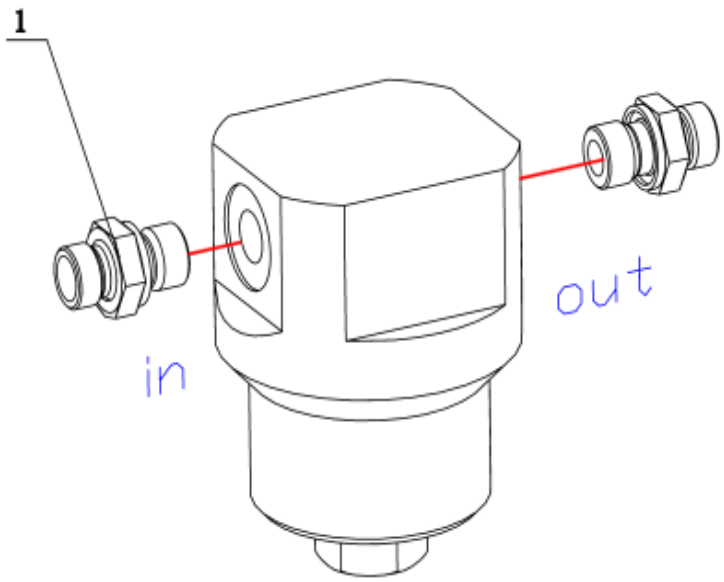

序号 POS	编码 CODE	DESCRIPTION	名称	数量 QTY	备注 remark
1	730101000130	END STRAIGHT COUPLING	端直通接头GE08LM14X1.5ED0MDA3C	2	1-2

中央回转接头安装(ACE0000121)

CENTER SWIVEL JOINT

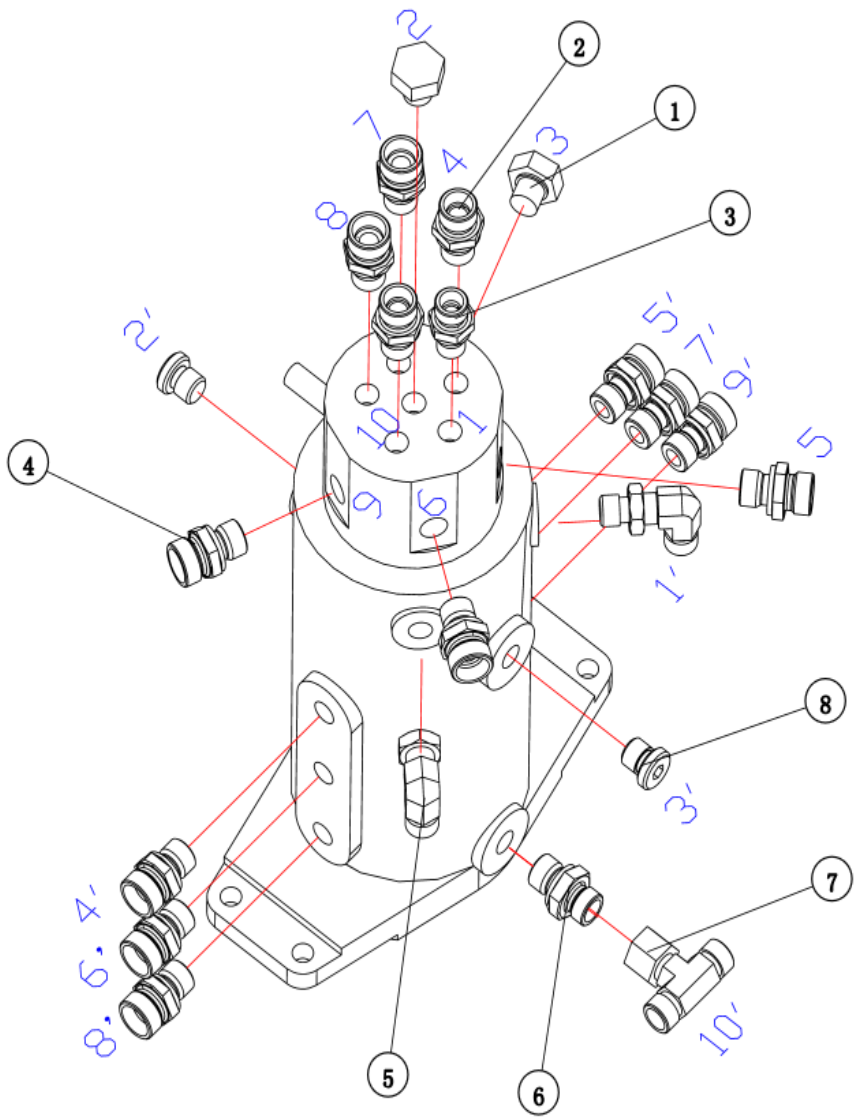

序号 POS	编码 CODE	DESCRIPTION	名称	数量 QTY	备注 remark
1	730199000906	BLOCK THE HEAD	外六角堵头SWPM12x1.5FD(SH)	2	1-1
2	730101000005	MAL STUD FITTING	端直通接头GE10LM14X1.5EDOMDA3C	3	1-2
3	730101000055	END STRAIGHT COUPLING	端直通接头GE08LM12X1.5EDOMDA3C	1	1-3
4	730101000044	END STRAIGHT COUPLING	端直通接头GE12LM14X1.5EDOMDA3C	10	1-4
5	730102000017	END STRAIGHT COUPLING	端直角可调向接头WEE08LM12X1.5OMDA3C	2	1-5
6	730101000130	END STRAIGHT COUPLING	端直通接头GE08LM14X1.5EDOMDA3C	1	1-6
7	730104000017	TEE COMBINATION JOINT ET08LOMDA3C	三通组合接头ET08LOMDA3C	1	1-7
8	739806000026	PLUG, SOCKET	内六角油口堵头VSTI12X1.5EDA3C	2	1-8

左手柄接头安装(ACE0000341)

LDFT PILOT HANDLE CONNECTOR INSTALLATION

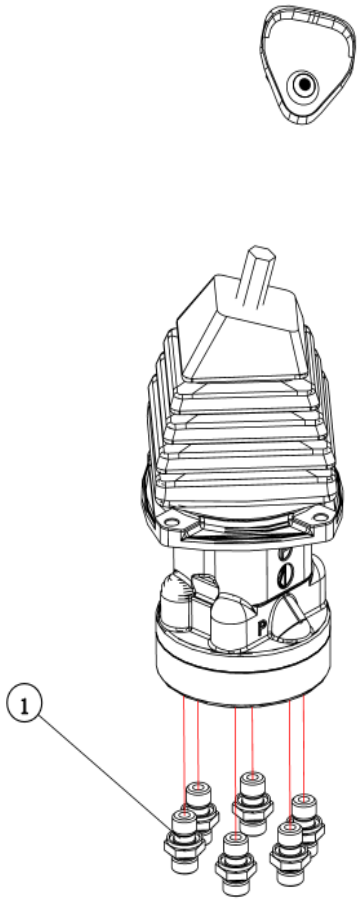

序号 POS	编码 CODE	DESCRIPTION	名称	数量 QTY	备注 remark
1	730101000079	END STRAIGHT COUPLING	端直通接头GE08LR1/4EDOMDA3C	6	

上车电气系统-null(ACE0000137)

Onboard electrical system

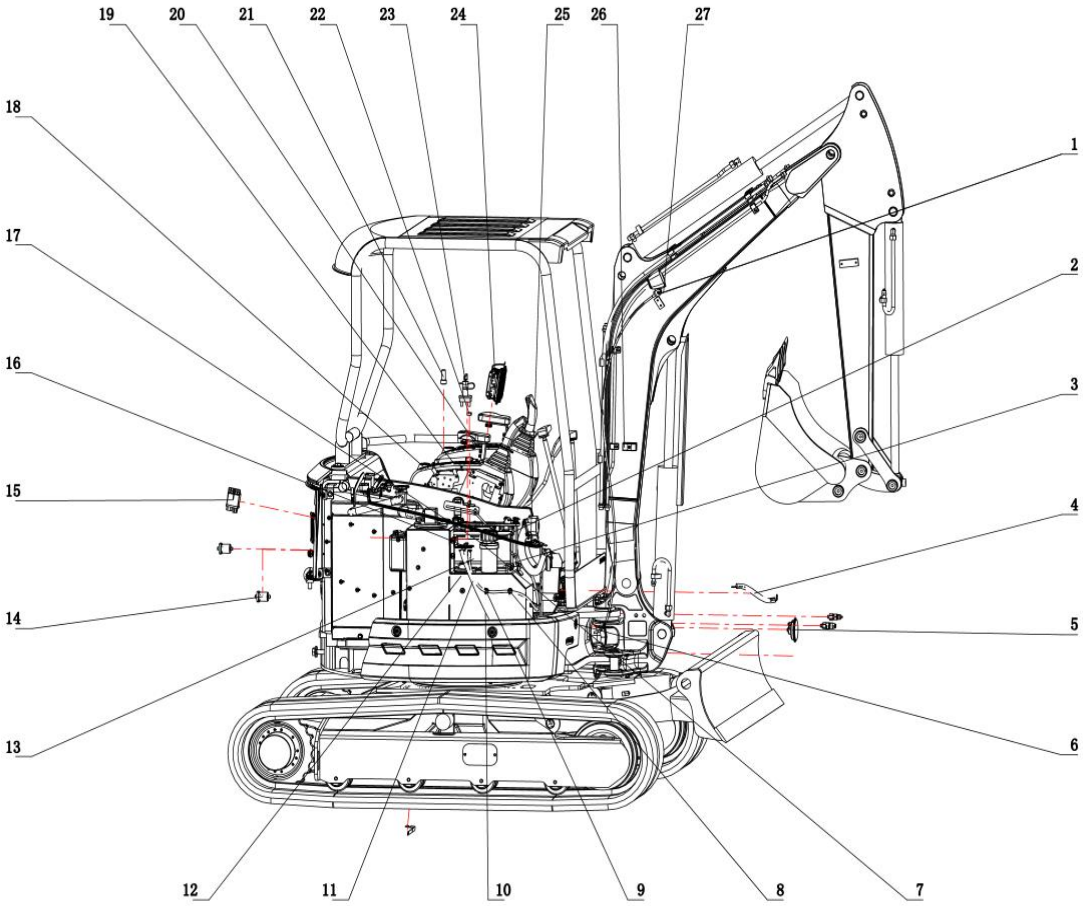

序号 POS	编码 CODE	DESCRIPTION	名称	数量 QTY	备注 remark
1	720214000210	WORKING LIGHT, LED	LED工作灯CJTD-10W1-20A	1	1-1
2	729904000236	BATTERY	蓄电池6-QW-70	1	1-2
3	ACE0000219.2	NEGATIVE CABLE	负极电缆QVR25B-1000	1	1-3
4	729806000001	TIE THE IRON LINE	搭铁线350X25	1	1-4
5	720407000067	TRUMPET	电喇叭KDL129(安普插头)	1	1-5
6	701504008005	WASHER	垫圈8.0200 HV-DKL GBT 97.1	3	1-6
7	701504006002	WASHER	垫圈6-DKL GBT 97.1	2	1-7
8	729901000019	BAND	扎带	4	1-8
9	ACE0000218.3	POSITIVE CABLE	正极电缆QVR25R-2100	1	1-9
10	ACE0000220.2	EARTHED CABLE	搭铁电缆QVR25B-600	1	1-10
11	701309005011	SCREW	螺钉M5X16-ZnD GB/T 818	4	1-11
12	701302006032	SCREW	螺钉M6X20-8.8-DKL GB/T 70.1	2	1-12
13	ACE0000920.4	PIATFORM HARNESS	CFG35UF液压挖掘机平台线束（久保田）	1	1-13
14	720212001730	TEMPERATURE SENSOR	温度传感器323 801 001 007	1	1-14
15	720298000003	SAFETY RELAY	安全继电器119802-77200	1	1-15
16	701104008026	BOLT	螺栓	3	1-16
17	701510006003	WASHER	垫圈6-DKL GB/T 93	2	1-17
18	720245000043	IGNITION LOCK	钥匙开关	1	1-18
19	895800100001.1	DISPLAY SCREEN	SWCM050A彩显屏总成V1.00	1	1-19
20	ACE0000250.1	ROCKER SWITCH	CFG35UF封闭司机室翘板开关	1	1-20
21	720410000010	BUZZER	蜂鸣器AD17-16SML/DC12V	1	1-21
22	720210000076	FUSE PROTECTOR	熔断器BFS-080	1	1-22
23	720238000532	NEGATIVE SWITCH	负极开关ZC-03-01	1	1-23
24	720418000578	ELECTRIC CONTROL BOX	电控盒	1	1-24
25	720412000286	LIGHT	LED工作灯WE-0403R DC 12-36V 12W泛光	1	1-25
26	ACE0000221.2	BOOM LIGHT WIRING HARNESS	CFG18U动臂灯线束	1	1-26
27	701510005002	WASHER	垫圈5-DKL GBT 93	4	1-27

CFG35UF封闭司机室翘板开关(ACE0000250)

ROCKER SWITCH

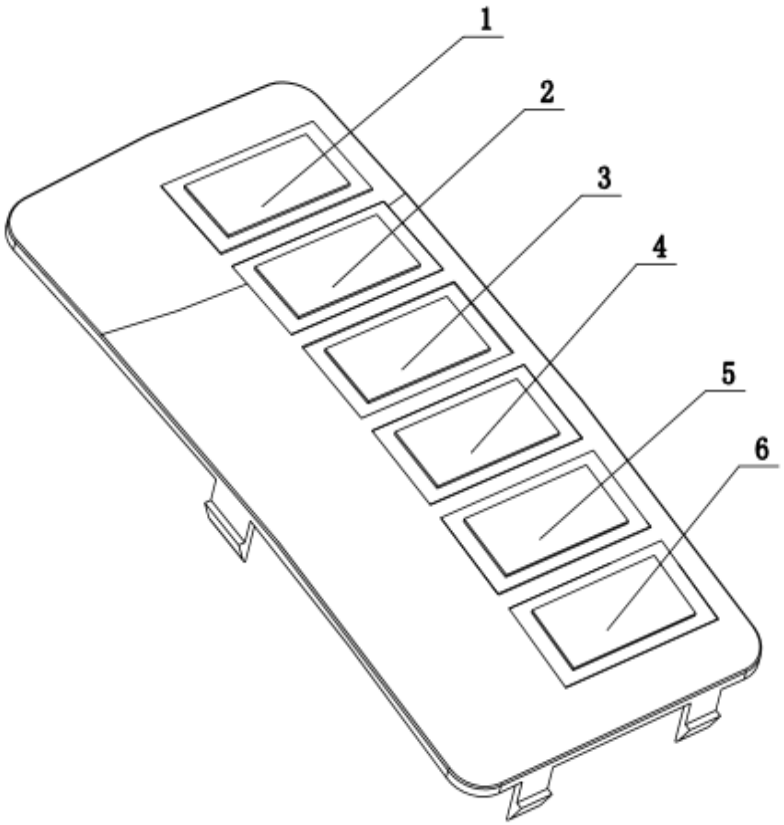

序号 POS	编码 CODE	DESCRIPTION	名称	数量 QTY	备注 remark
1	720236001026	WARPED PLATE SWITCH	翘板开关JK962B-001-15.01	1	1-1
2	720236001025	WARPED PLATE SWITCH	翘板开关JK962B-145-4.19	1	1-2
3	720236001030	WARPED PLATE SWITCH	翘板开关JK962B-091-4.93/15.02	1	1-3
4	720236001027	WARPED PLATE SWITCH	翘板开关JK962B-161-18.4	1	1-4
5	720236001023	WARPED PLATE SWITCH	翘板开关JK962B-106-2.5	1	1-5
6	720236001024	WARPED PLATE SWITCH	翘板开关JK962B-128-2.6	1	1-6

电瓶安装(ACE0000706)

BATTERY INSTALLATION

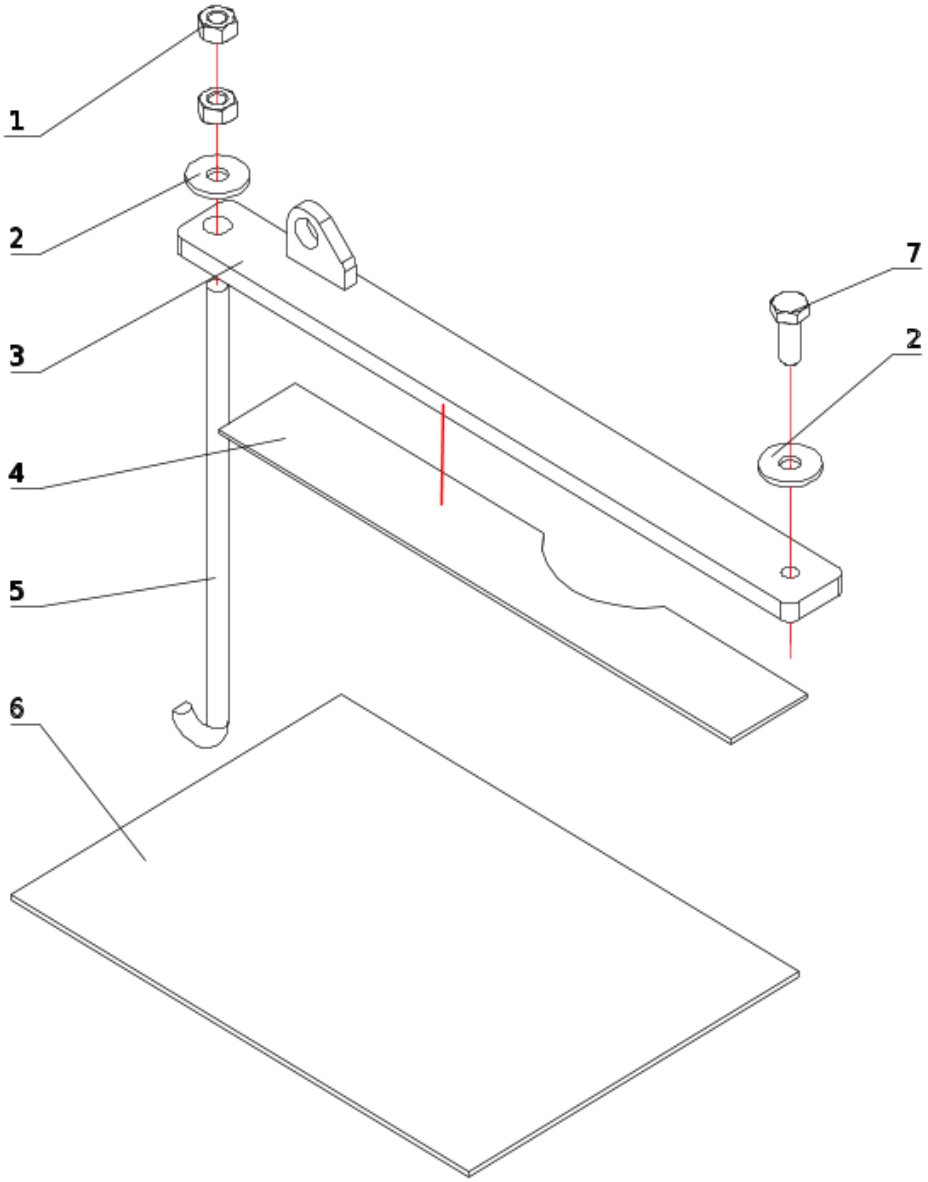

序号 POS	编码 CODE	DESCRIPTION	名称	数量 QTY	备注 remark
1	701406008004	NUT	螺母M8-8-DKL GBT 6170	2	1-1
2	701506008002	WASHER	垫圈8-DKL GBT 96.1	2	1-2
3	ACE0000707.4	PRESSING PLATE ASSEMBLY	压板组件	1	1-3
4	ACE0000710.3	BATTERY PAD	电瓶垫板2	1	1-4
5	ACE0000711.1	BATTERY BAR	CFG20B电瓶拉杆	1	1-5
6	ACE0000712.1	BATTERY PAD	电瓶垫板1	1	1-6
7	701104008026	BOLT	螺栓	1	1-7

先导过滤器安装(ACE0000600)

PILOT FILTER INSTALLATION

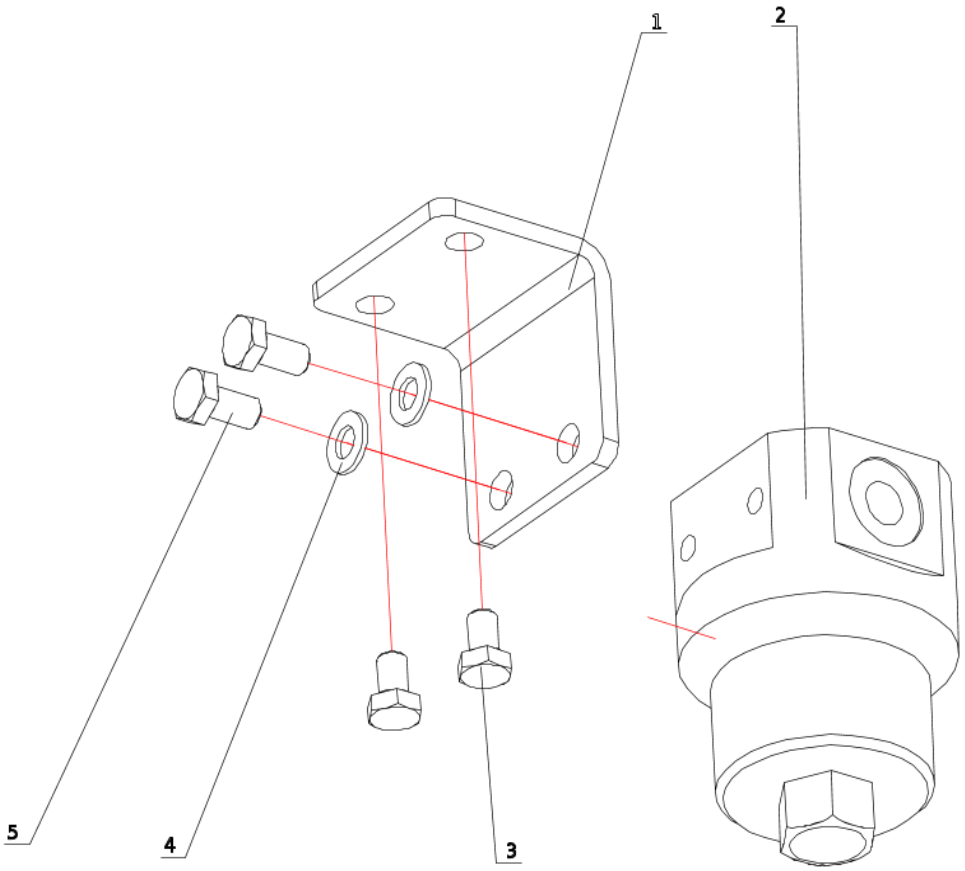

序号 POS	编码 CODE	DESCRIPTION	名称	数量 QTY	备注 remark
1	ACE0000601.1	SUPPORT	先导过滤器支架	1	1-1
2	730401000358	PILOT FILTER	先导过滤器KGLB0010010L	1	1-2
3	701104008043	BOLT	螺栓M8X12-8.8-DKL GB/T 5783	2	1-3
4	701504008005	WASHER	垫圈8.0200 HV-DKL GBT 97.1	2	1-4
5	701104008026	BOLT	螺栓	2	1-5

多路阀部装-null(ACE0000619)

MIULTIWAY VALVE INSTALLATION

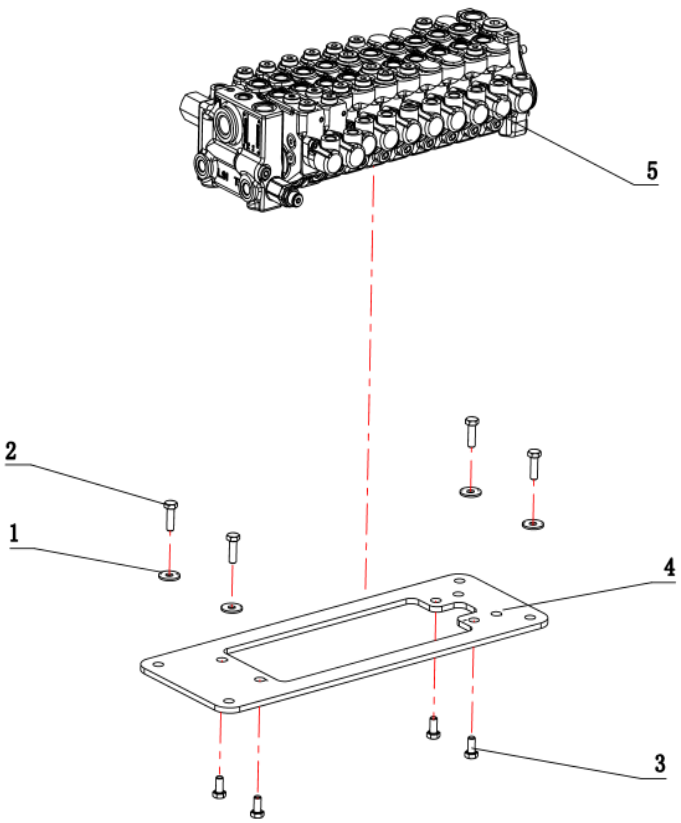

序号 POS	编码 CODE	DESCRIPTION	名称	数量 QTY	备注 remark
1	701506008002	WASHER	垫圈8-DKL GBT 96.1	4	1-1
2	701104008028	BOLT	螺栓8X25-8.8-DKL GB/T 5783	4	1-2
3	701104008026	BOLT	螺栓	4	1-3
4	ACE0000621.1	MIULTIWAY VALVE MOUNTING PLATE	多路阀安装板（配恒立多路阀）	1	1-4
5	730302000498	MULTITANDEM VALVE	多路阀HVSE-09-10-PLL270-BE043	1	1-5

配重安装(ACE0000574)

COUNTERWEIGHT INSTALLATION

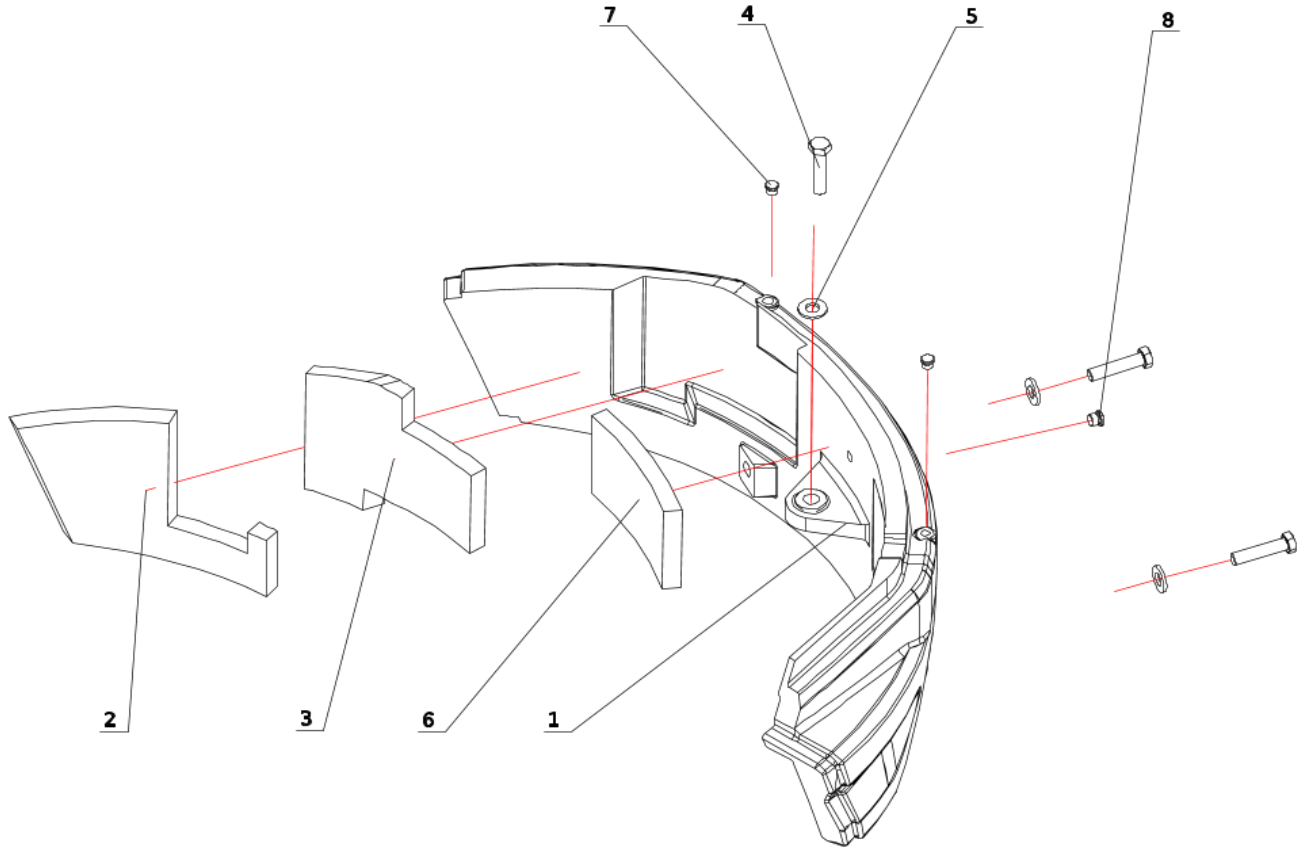

序号 POS	编码 CODE	DESCRIPTION	名称	数量 QTY	备注 remark
1	ACE0000575.2	BOB-WEIGHT	CFG35UF配重	1	1-1
2	ACE0000576.1	COUNTERWEIGHT SPONGE	配重海绵2	1	1-2
3	ACE0000577.1	COUNTERWEIGHT SPONGE	配重海绵1	1	1-3
4	701103020033	BOLT	螺栓M20X90-10.9-DKL GB/T 5782	3	1-4
5	ACE0000578.1	MOUNTING PLATE	配重安装垫板	3	1-5
6	ACE0001674.1	COUNTERWEIGHT SPONGE	配重海绵	1	1-6
7	750006010133	RUBBER PLASTIC PLUG	橡塑堵头M16	2	1-7
8	739900000405	PLASTIC SCREW PLUG	塑料螺堵M20	1	1-8

下车总成-null(ACE0000172)

TRAVEL DEVICE

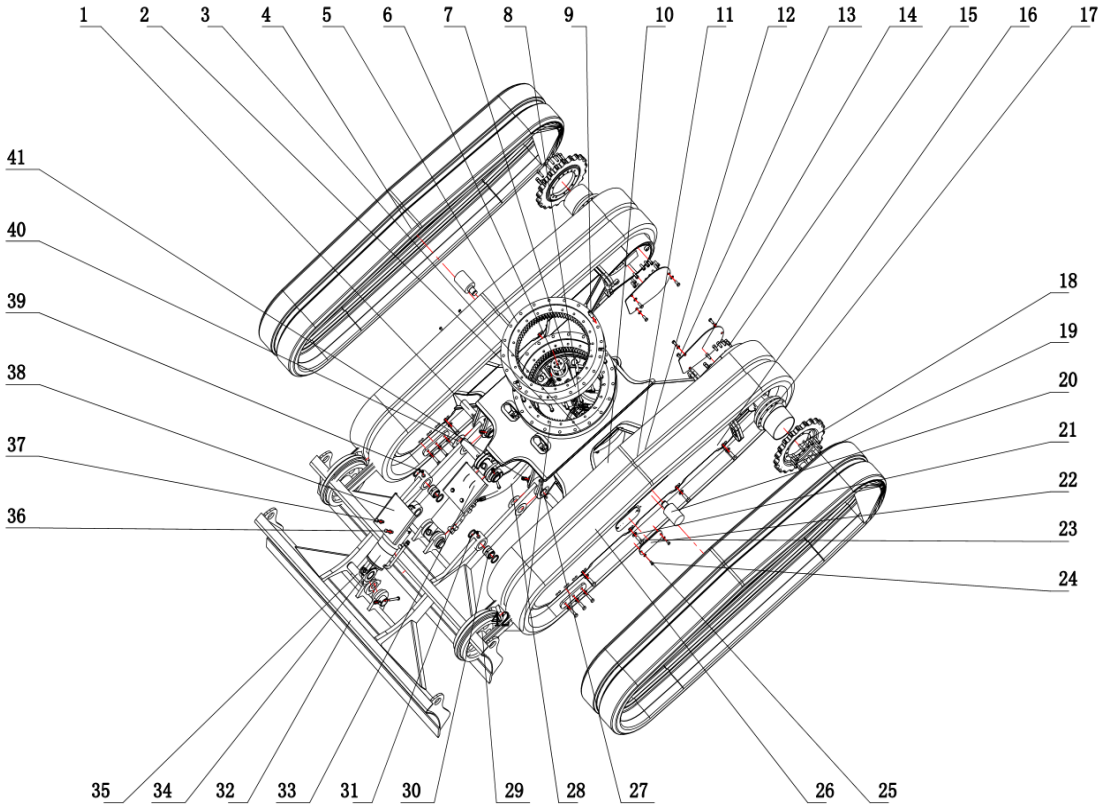

序号 POS	编码 CODE	DESCRIPTION	名称	数量 QTY	备注 remark
1	ACE0000292.1	PIN SHAFT	销固定销40X100	2	1-1
2	701103012035	BOLT	螺栓M12X70-10.9-DKL GB/T 5782	40	1-2
3	ACE0000174.1	BOTTOM SEALING PLATE	底封板	1	1-3
4	750101000033	RUBBER TRACK	履带总成300/55/78/T/C	2	1-4
5	BCP0000274	SLEWING BEARING	回转支承QND500.20Z8	1	1-5
6	739802000165	TURNING JOINT	17-20中央回转接头	1	1-6
7	701104008040	BOLT	螺栓8.0X30.0-10.9-DKL GB/T 5783	4	1-7
8	ACE0000138.2	TRAVEL FRAME	行走架	1	1-8
9	701706016007	MELT	销16X40 GB/T 120.2	2	1-9
10	701104010030	BOLT M10X16-8.8-DKL GBT 5783	螺栓M10X16-8.8-DKL GB/T 5783	4	1-10
11	701504012005	WASHER	垫圈12-DKL GBT 97.1	14	1-11
12	701103012041	BOLT	螺栓12.0X65.0-10.9-DKL GB/T 5782	2	1-12
13	701104010033	BOLT	螺栓M10X25-10.9-DKL GB-T 5783	6	1-13
14	ACE0000171.1	MOTOR COVER PLATE	马达盖板	2	1-14
15	701302010045	SCREW	螺钉M10X25-10.9-DKL GBT 70.1	24	1-15
16	750102000042	THRUST WHEEL	支重轮ZZL-28	8	1-16
17	730250000655	WALKING MOTOR	行走马达MG-18VP-230F-9(B0240-18102)	2	1-17
18	306060000038.2	DRIVING WHEEL	驱动轮	2	1-18
19	701302010056	SCREW	螺钉M10X35-10.9-DKL GBT 70.1	26	1-19
20	750103000011	SPROCKET	托链轮SH101-T-00	2	1-20
21	701504014002	WASHER	垫圈14-DKL GBT 97.1	16	1-21
22	ACE0000173.1	SIDE SEALING PLATE	侧封板	2	1-22
23	701104014020	BOLT	螺栓M14X40-10.9-DKL GBT 5783	16	1-23
24	701104081601	BOLT	螺栓M8X16-10.9-DKL GBT 5783	4	1-24
25	701504008005	WASHER	垫圈8.0200 HV-DKL GBT 97.1	8	1-25
26	750106000033	TENSIONING DEVICE	FSTC2.5涨紧装置	2	1-26
27	7011030100A9	BOLT	螺栓M10X80-10.9-DKL GB/T 5782	4	1-27
28	ACE0000175.2	UNDERCARRIAGE HYDRAULIC SYSTEM	下车液压系统	1	1-28
29	750105000060	GUIDE WHEEL	导向轮CFG35UF-0100	2	1-29
30	ACE0000274.1	SHAFT SLEEVE	轴套40×47	2	1-30
31	730652000026	DUST RING	防尘圈DLW04002 50X40X5	4	1-31
32	ACE0000207.2	DOZER BLADE	推土铲焊接	1	1-32

下车总成-null(ACE0000172)

TRAVEL DEVICE

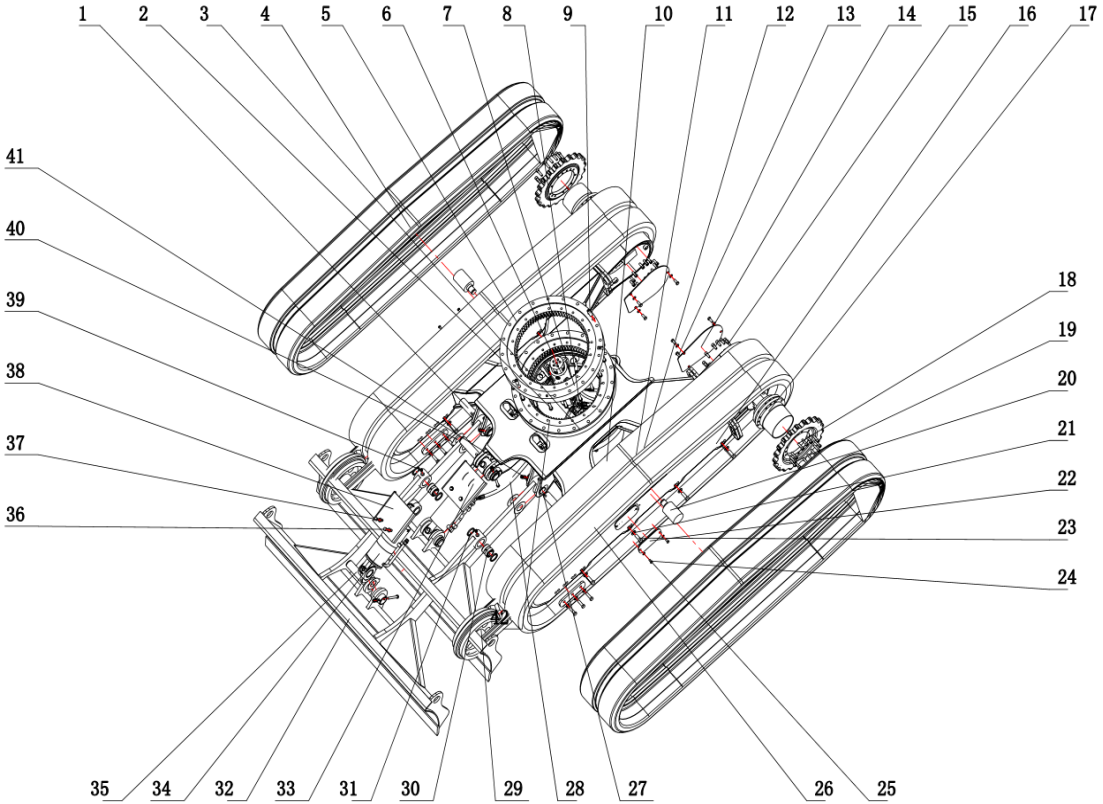

序号 POS	编码 CODE	DESCRIPTION	名称	数量 QTY	备注 remark
33	750911000032	RESIN GASKET	树脂调整垫Φ 75XΦ 41X1.5	4	1-33
34	AH00000221.1	BULLDOZER CYLINDER	推土油缸	1	1-34
35	ACE0001672.1	MELT	销固定销轴40X130	2	1-35
36	701104010036	BOLT	螺栓M10X20-10.9-DKL GB/T 5783	2	1-36
37	701504010004	WASHER	垫圈10-DKL GBT 97.1	12	1-37
38	ACE0000332.1	CYLINDER GUARD PLATE	推土油缸护板	1	1-38
39	703102010002	GREASE CUP	油杯M10X1 45° JB/T 7940.2	2	1-39
40	750911000051	RESIN GASKET	树脂调整垫Φ 80XΦ 41X1.5	4	1-40
41	701406010006	NUT	螺母M10-10-DKL GB/T 6170	8	1-41

行走马达接头安装(ACE0000135)

TRACK MOTOR CONNECTOR

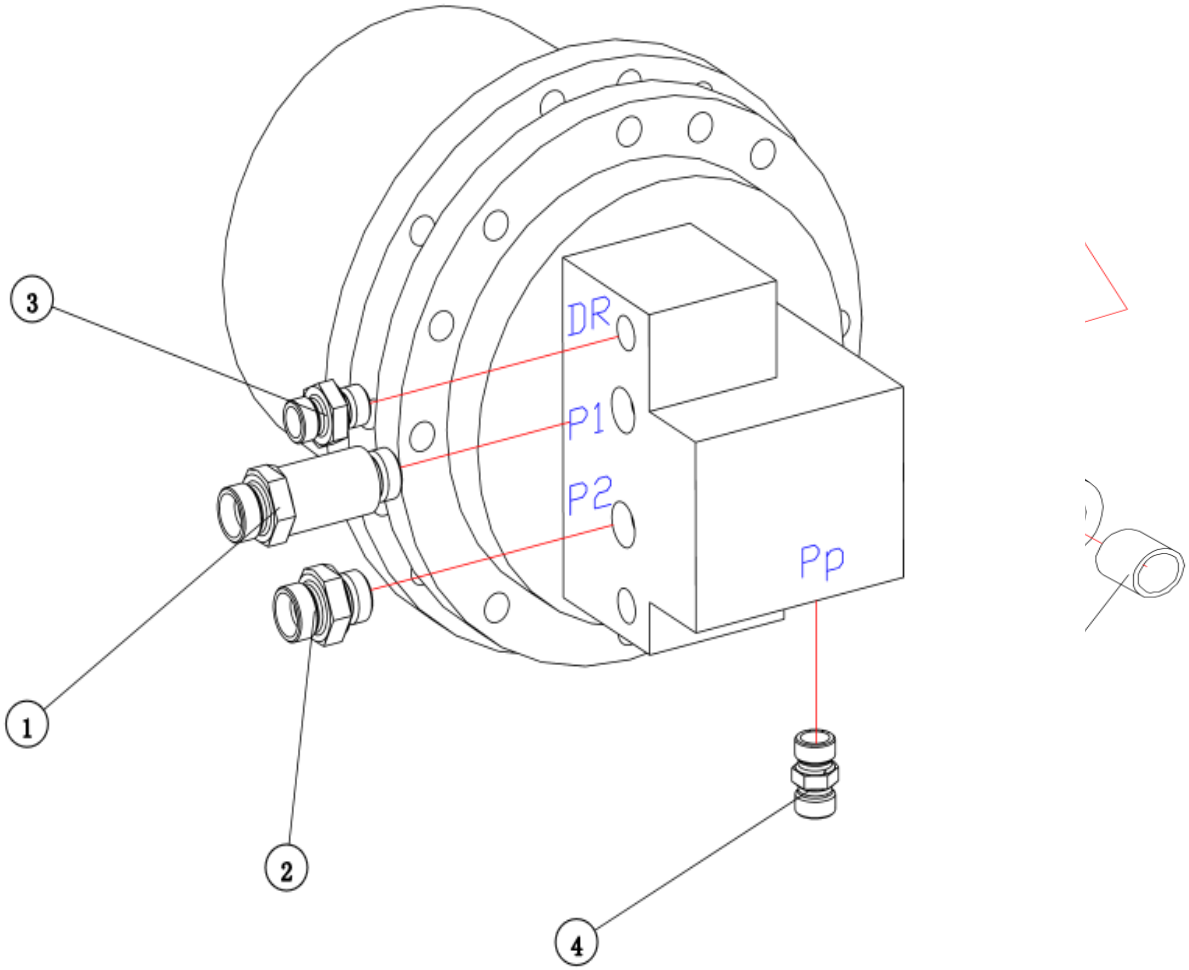

序号 POS	编码 CODE	DESCRIPTION	名称	数量 QTY	备注 remark
1	730101000349	END STRAIGHT COUPLING	端直通接头GE012LR3-80MDA3C/35	1	1-1
2	730101000113	MAL STUD FITTING	端直通接头GE012LR3-80MDA3C	1	1-2
3	730101000080	END STRAIGHT COUPLING	端直通接头GE008LR1-40MDA3C	1	1-3
4	730101000661	CONNECT	直接头G1/4-M14X1.5	1	1-4

下车液压系统(ACE0000175)

UNDERCARRIAGE HYDRAULIC SYSTEM

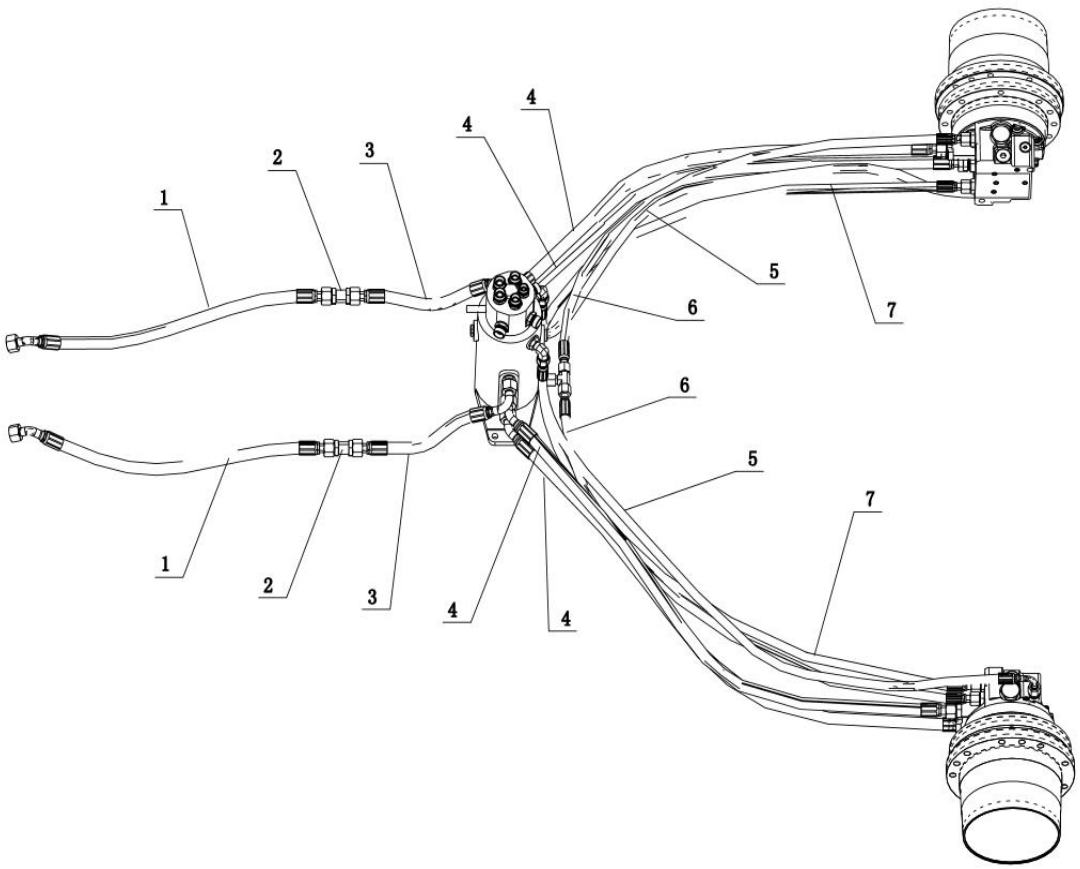

序号 POS	编码 CODE	DESCRIPTION	名称	数量 QTY	备注 remark
1	730502008654	HOSE ASSEMBLY	胶管总成F431CACE121206-550-SG-550	2	1-1
2	730101000372	COUPLING	直通隔板接头SV12LOMDA3C	2	1-2
3	730502005859	HOSE ASSEMBLY	胶管总成F431CACF121206-290	2	1-3
4	730502000450	HOSE ASSEMBLY	胶管总成F431CACE121206-900	4	1-4
5	730501001654	HOSE ASSEMBLY	胶管总成F481CACF080804-1110	2	1-5
6	730501000362	HOSE ASSEMBLY	胶管总成F481CACA080804-900	2	1-6
7	730501001349	HOSE ASSEMBLY	胶管总成F481CACA080804-1050	2	1-7

推土油缸(AH00000221)

DOZER CYLINDER

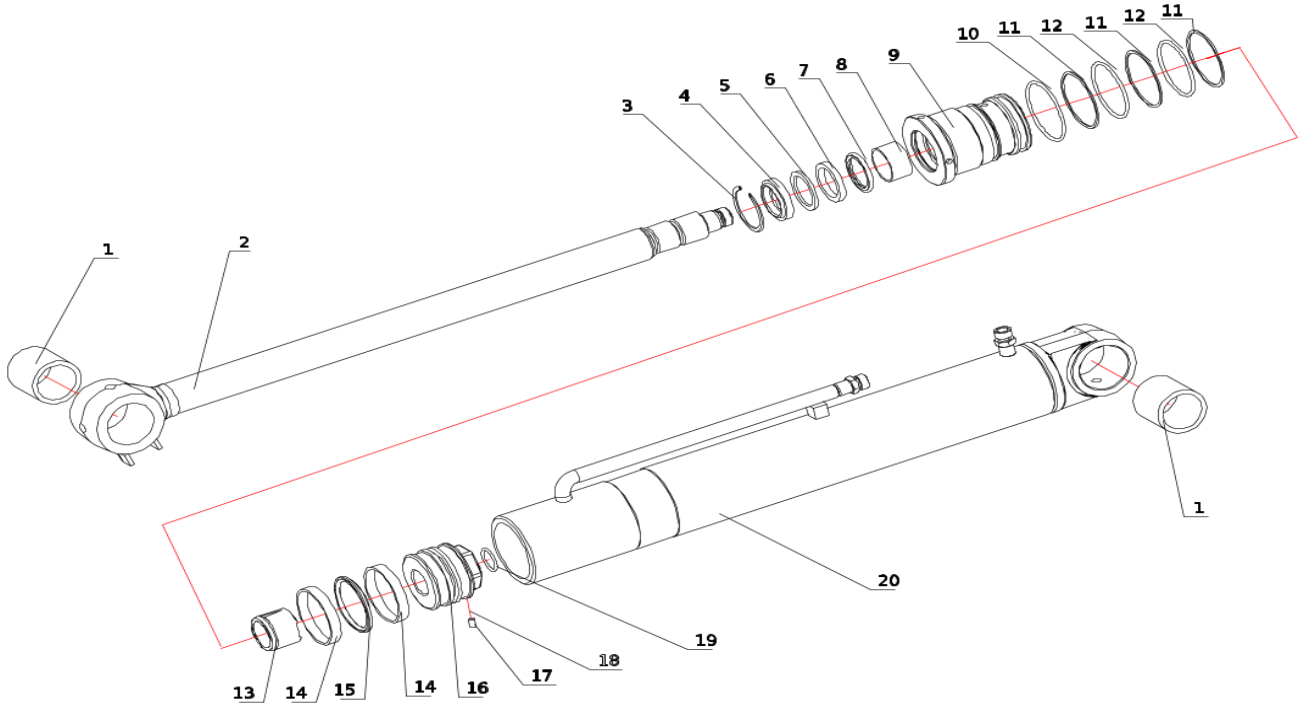

序号 POS	编码 CODE	DESCRIPTION	名称	数量 QTY	备注 remark
1	750502000640	BUSH	粉末冶金轴套40X50X49	2	1-1,1-1
2	AH00000224.1	PISTON ROD ASSEMBLY	活塞杆组件	1	1-2
3	302010006152.1	STOP COLLAR OF DUSTBAND	防尘圈挡圈45	1	1-3
4	730652000598	DUSTBAND	防尘圈HWGA 45X57X10 M2112A	1	1-4
5	730654000095	STOP COLLAR	挡圈DQ 45X55X3 S102	1	1-5
6	730601000606	PISTON ROD SEAL PART	活塞杆密封HRS 45X55X6 P2005	1	1-6
7	730601000688	PISTON ROD SEAL PART	活塞杆密封HRX 45X60.5X6 M2122A	1	1-7
8	750502000277	SELF LUBRICATING BEARING	自润滑多层复合轴承COB010 4520	1	1-8
9	301020003010.1	CIRCLIP	弹簧挡圈50X3	1	1-9
10	AH00000232.1	CYLINDER HEAD	缸头M97X2-92-45-70	1	1-10
11	730603001411	O-RING	O形圈89.4X3.1-NBR-A70 JISB 2401(W)	1	1-11
12	730654000664	STOP COLLAR	挡圈DQ 87X92X1.5 S106	1	1-12
13	730603001453	O-RING	O形圈84.4X3.1-NBR-A90 JISB 2401(W)	1	1-13
14	730651000554	GUIDING RING	导向环HGR 85X90X9.7 S108-3	2	1-14,1-14
15	730602000452	PISTON SEAL	活塞密封HPG 75X90X10.5 M500H	1	1-15
16	AH00000233.1	PISTON	活塞M37X2-30-90-60	1	1-16
17	750551000003	STEEL BALL	钢球GCr15 D6	1	1-17
18	701307008002	SCREW	螺钉M8X16 GBT 77	1	1-18
19	730603001714	O-RING	O形圈29.4X3.1-NBR-A90 JISB 2401(W)	1	1-19
20	AH00000230.1	CYLINDER BARREL	缸筒组件	1	1-20